www.ktoolinc.com

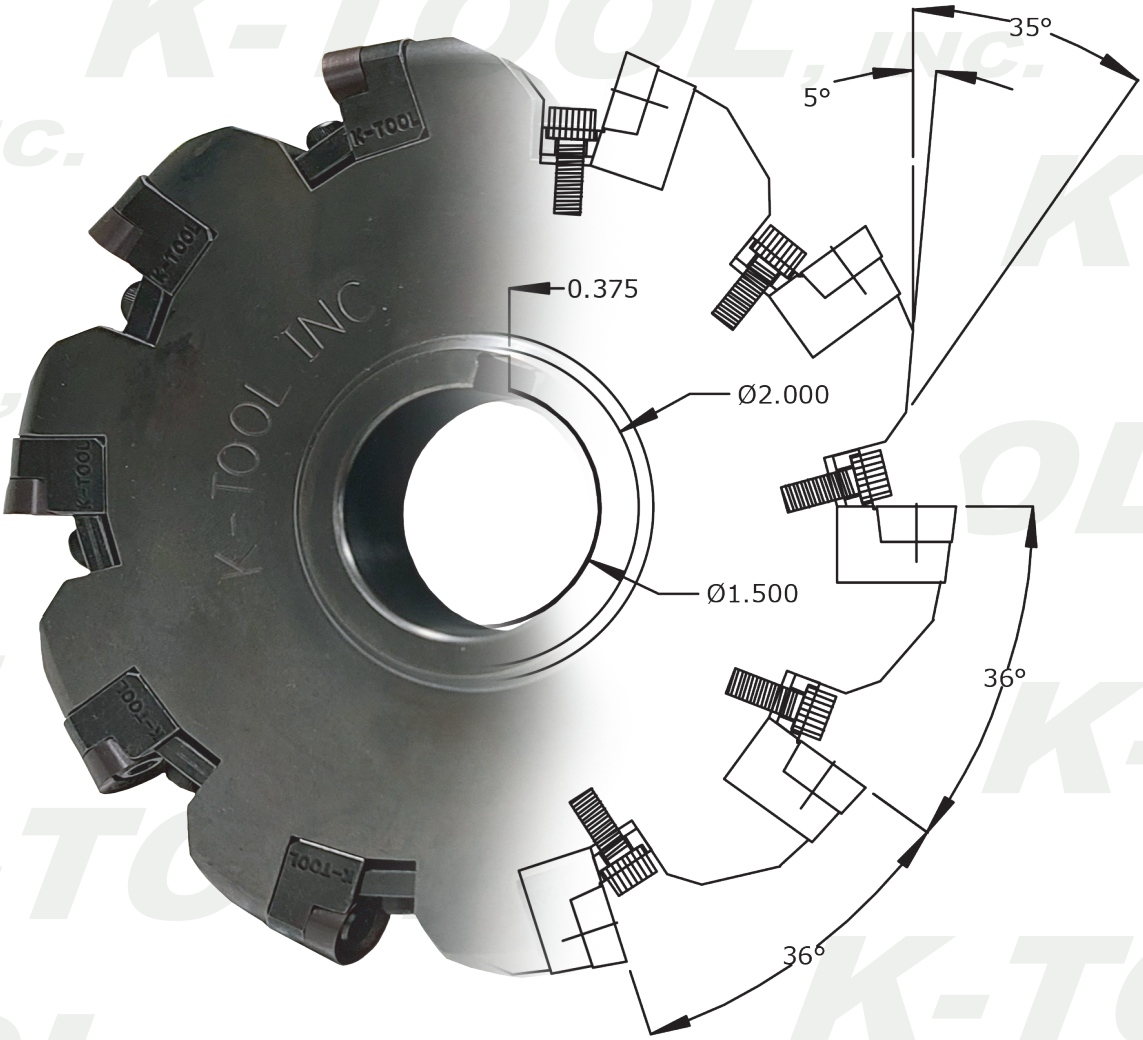

K-TOOL, INC.

Pioneers in Productivity

Catalog 15

3/20/25

K-Tool, Inc.

99 Enterprise Drive
New Oxford, PA 17350-9253

Phone: 800-377-3056
717-624-3866

E-Mail: info@ktoolinc.com
sales@ktoolinc.com

Guarantee

We guarantee all of our products to be free from defects in workmanship and material. If any defects are apparent, the item will be replaced at no charge.

K-Tool, Inc. accepts no liability for any consequential damage to persons or equipment beyond the guarantee stated above.

Policies

CONDITION OF SALE

All sales are made in accordance with our standard conditions of sale which is current at the time orders are accepted. All of the specifications and prices are subject to change without notice.

TERMS OF PAYMENT

All invoices are NET 30 DAYS from date of invoice. All accounts with invoices past 60 days will be placed on credit hold.

SHIPPING & PROCESSING

All orders are sent via UPS. We will ship orders Freight Collect, although correct info must be provided or additional charges may apply. All in stock items ship the same day if order is received before 3:00 p.m. EST. We do not ship orders on weekends or holidays.

RETURNS

All returns must have prior authorization within 60 days and may be subject to a 15% restocking charge. After evaluating returns a credit will be issued - WE DO NOT ACCEPT DEBIT MEMOS.

MINIMUM ORDER

The minimum order is $100.00 list. Orders under $100.00 will be charged with a $10.00 small order fee.

TEST TOOL POLICY

We will ship cutter bodies and inserts on performance purchase order numbers after the guaranteed test form information is supplied. K-Tool, Inc. will cover the tool bodies only. No credit will be given on used inserts, however credit will be issued on unused inserts. Items will be invoiced at the time of shipment. All test tools must be paid for or returned within 60 days. Refer to page 169 for test form.

Table of Contents

Special Tools		4
Inserts		10
Spot Drills	SDCS	16
Flat Bottom Drills	FB	25
Drill Sergeants	DS-DSL	33
Drill Mills	DM-XDM	41
Drill Mill Twins	DMT-XDMT	47
Drill Mill Twin Long Edge	DMTL	52
FEC-Mills	FEC	54
Counterbore Tools	CBN-CB-CH-BCB	58
High Feed Mills	HF	66
Octa-Mills	HDOC-OC-XOC-DOC	69
Chamfer Products	A-AC-ACR-CMR-OD-CC-CCS-DCR	76
Dovetail Cutters	DT	93
Mini Mills	MM-XMM	97
Radius Mills	RM-RML-RMS-XRM	99
Keli-Mills	KE-KEL	105
Serators	S-SM-V50	109
Super Alloy Mills	SA-SAL	116
Eight Square Positive Mills	ESP-ESPS	121
Stockbusters	SB-V50SB	124
Universal Mills	UM	127
T-Slot & Key Cutters	TS-TSK	130
Radius Slotting Mills	TSR	136
Slotting / Half Side Mills	SC-SCSM	142
Radius Slotting Cutters	SCR-SCRSM	155
Test Tool / Screw Torque Info		168

Special Tools

C-Bore / Core Drill

D	
E	
L	
H	
B	
D.O.C.	
S	
Coolant Thru	Yes / No
Flat Type	

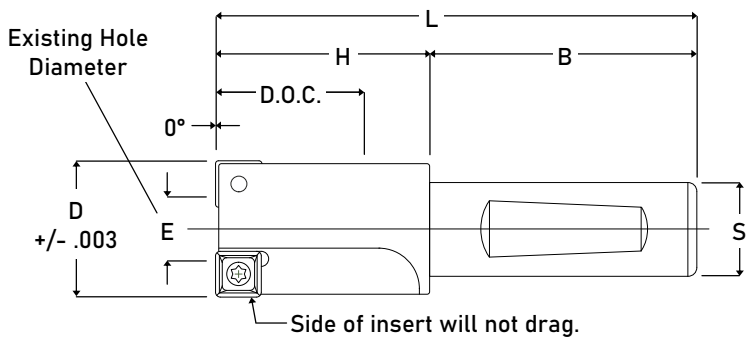

Dual C-Bore Tool

D-1	
D	
E	
L	
H	
B	
D.O.C.	
G	
S	
Coolant Thru	Yes / No
Flat Type	

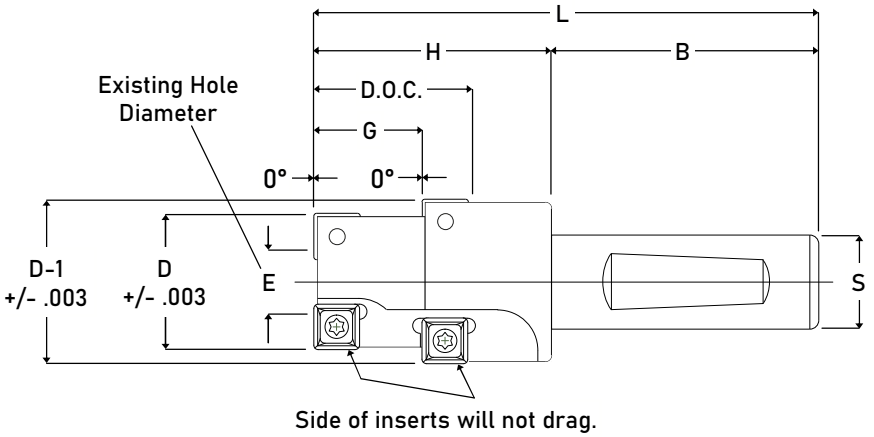

Contact Information	Application Information
Distributor -	Mill or Lathe -
Salesperson -	Spindle Taper -
E-Mail -	Horsepower -
Phone # -	Workpiece Material -
Enduser -	Workpiece Hardness -
E-Mail -	Other Information -
Phone # -	

Fastest Delivery Time in the Industry!

Special Tools

Counterbore & Chamfer Tool

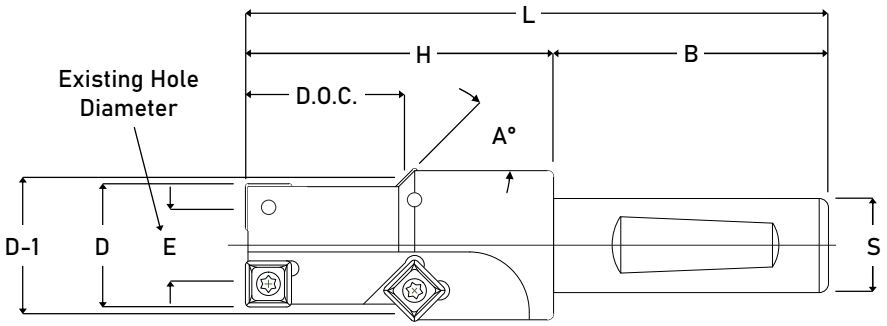

D-1	
D	
E	
L	
H	
B	
D.O.C.	
A	
S	
Coolant Thru	Yes / No
Flat Type	

Back Counterbore Tool

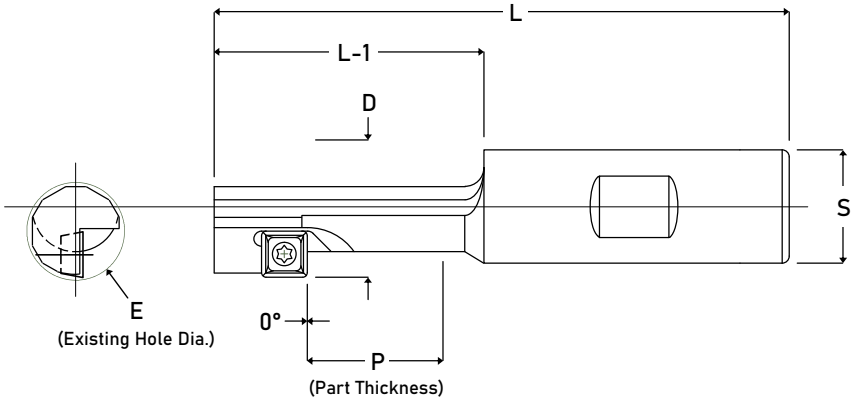

E	
D	
P	
L	
L-1	
S	
Coolant Thru	Yes / No
Flat Type	

Contact Information
Distributor -
Salesperson -
E-Mail -
Phone # -
Enduser -
E-Mail -
Phone # -

Application Information
Mill or Lathe -
Spindle Taper -
Horsepower -
Workpiece Material -
Workpiece Hardness -
Other Information -

Fastest Delivery Time in the Industry!

Special Tools

Drill & Counterbore Tool

D	
E	
L	
H	
B	
D.O.C.	
G	
S	
Coolant Thru	Yes / No
Flat Type	

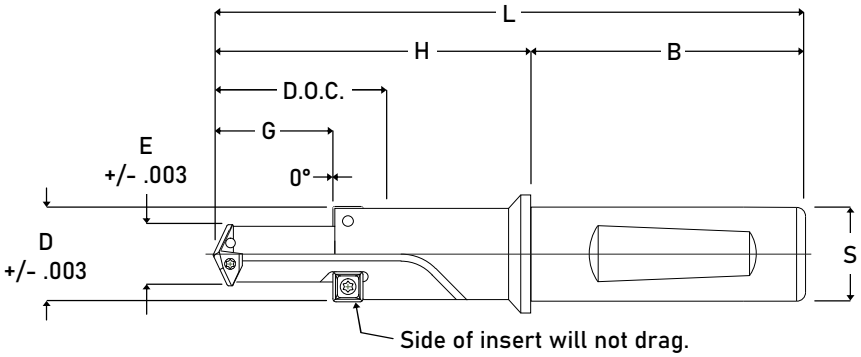

Drill Style

DS Style ☐

FB Style ☐

Drill & Chamfer Tool

D	
E	
L	
H	
B	
D.O.C.	
A	
S	
Coolant Thru	Yes / No
Flat Type	

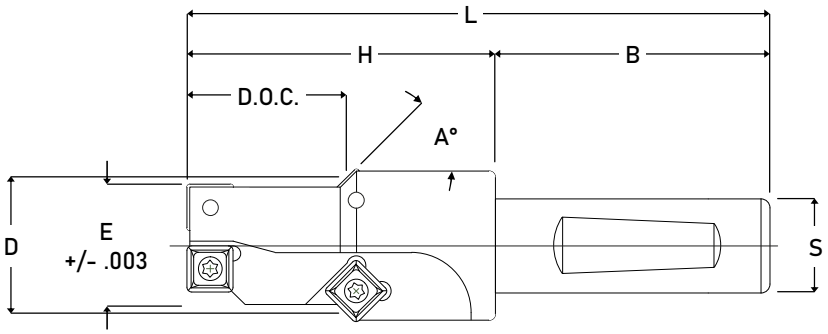

Drill Style

DS Style ☐

FB Style ☐

CB Style ☐

Existing Hole Dia. =

Contact Information
Distributor -
Salesperson -
E-Mail -
Phone # -
Enduser -
E-Mail -
Phone # -

Application Information
Mill or Lathe -
Spindle Taper -
Horsepower -
Workpiece Material -
Workpiece Hardness -
Other Information -

Fastest Delivery Time in the Industry!

Special Tools

Chamfer Mill

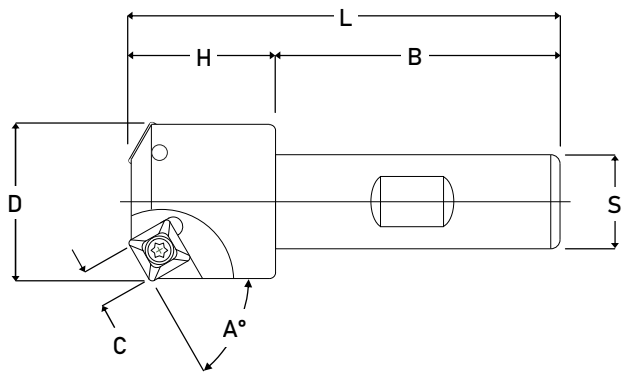

D	
L	
H	
B	
C	
A°	
S	
Flat Type	
Coolant Thru	Yes / No
Application	Mill / Plunge

Long Edge Chamfer Mill

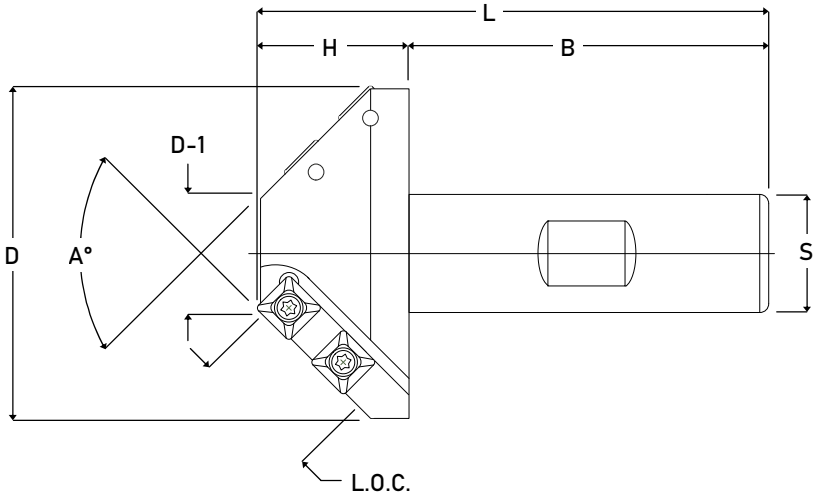

D	
A°	
D-1	
L	
H	
B	
L.O.C.	
S	
Flat Type	
Application	Mill / Plunge

Contact Information
Distributor -
Salesperson -
E-Mail -
Phone # -
Enduser -
E-Mail -
Phone # -

Application Information
Mill or Lathe -
Spindle Taper -
Horsepower -
Workpiece Material -
Workpiece Hardness -
Other Information -

Fastest Delivery Time in the Industry!

Special Tools

T-Slot / Key Cutter

D	
D-1	
L	
L-1	
L-2	
B	
S	
Coolant Thru	Yes / No
Flat Type	

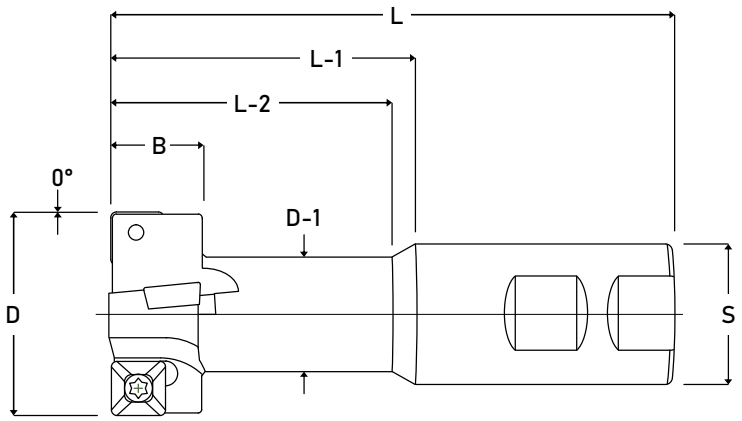

Radius Slotting Mill

D	
D-1	
L	
L-1	
L-2	
B	
S	
Coolant Thru	Yes / No
Flat Type	

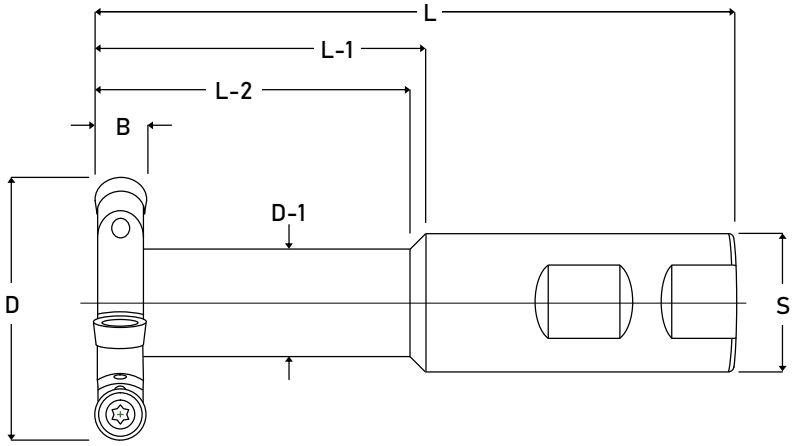

Contact Information	Application Information
Distributor -	Mill or Lathe -
Salesperson -	Spindle Taper -
E-Mail -	Horsepower -
Phone # -	Workpiece Material -
Enduser -	Workpiece Hardness -
E-Mail -	Other Information -
Phone # -	

Fastest Delivery Time in the Industry!

Special Tools

Slotting Cutter - Half Side Mill

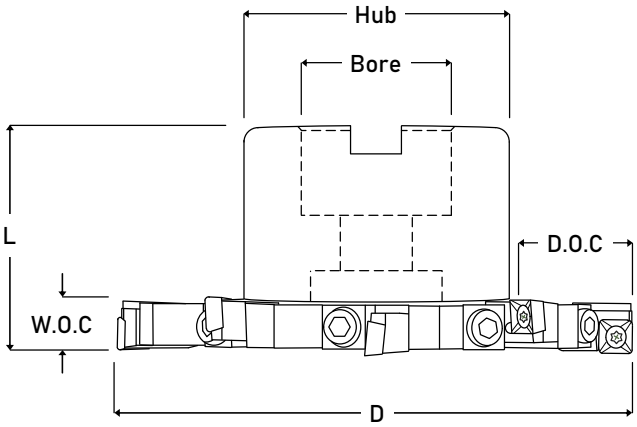

R.H. Cartridge

L.H. Cartridge

D	
L	
W.O.C (Full Slot)	
D.O.C	
Bore	
Hub	
Mounting Style	Arbor or Shell
Half Side	RH or LH

Full Radius Slotting Cutter

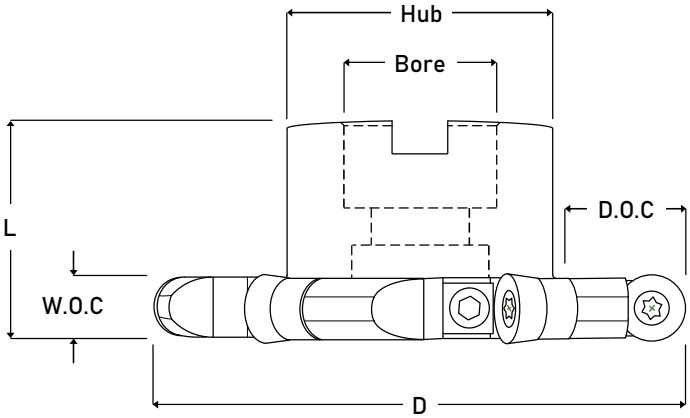

D	
L	
W.O.C	
D.O.C	
Bore	
Hub	
Mounting Style	Arbor or Shell

Contact Information
Distributor -
Salesperson -
E-Mail -
Phone # -
Enduser -
E-Mail -
Phone # -

Application Information
Mill or Lathe -
Spindle Taper -
Horsepower -
Workpiece Material -
Workpiece Hardness -
Other Information -

Fastest Delivery Time in the Industry!

ARP / Positive Top

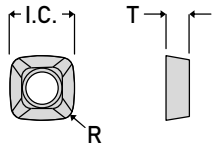

Available Grades

Insert #	I.C.	T	R	D66	K11
ARP-33	.375	.187	.062	+	+

DDEB / Positive Top

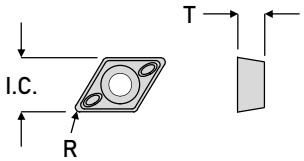

Available Grades

Insert #	I.C.	T	R	K11	K22
DDEB-2151P	.250	.095	.015	+	+

DDG / Flat Top

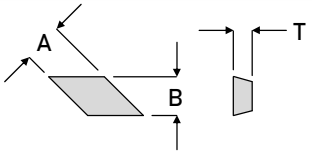

Available Grade

Insert #	A	B	T	K11
DDG-45	.190	.187	.093	+

DI

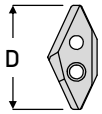

Available Grade

Insert #	D	K11
DI-343	.3438	
DI-375	.3750	
DI-406	.4062	
DI-421	.4219	
DI-437	.4375	
DI-468	.4688	
DI-500	.5000	
DI-515	.5156	
DI-531	.5312	+
DI-562	.5625	
DI-578	.5781	
DI-593	.5938	
DI-625	.6250	
DI-640	.6400	
DI-656	.6562	
DI-669	.6693	

Available Grade

Insert #	D	K11
DI-687	.6875	
DI-718	.7188	
DI-750	.7500	
DI-765	.7656	
DI-781	.7812	
DI-812	.8125	
DI-843	.8438	
DI-875	.8750	+
DI-906	.9062	
DI-921	.9219	
DI-937	.9375	
DI-968	.9688	
DI-984	.9840	
DI-1000	1.000	
DI-1031	1.0312	

Available Grade

Insert #	D	K11
DI-1062	1.0625	
DI-1093	1.0938	
DI-1125	1.1250	
DI-1156	1.1562	
DI-1187	1.1875	
DI-1218	1.2188	
DI-1250	1.2500	
DI-1281	1.2812	+
DI-1312	1.3125	
DI-1343	1.3438	
DI-1375	1.3750	
DI-1406	1.4062	
DI-1437	1.4375	
DI-1468	1.4688	
DI-1500	1.5000	

DPEB / Positive Top

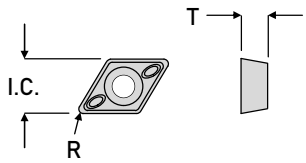

Available Grade

Insert #	I.C.	T	R	K11
DPEB-3252P	.375	.160	.031	+

DTI / Positive Top

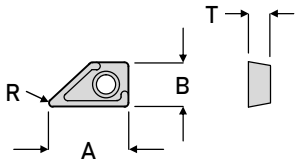

Available Grade

Insert #	B	A	T	R	K11
DTI-1511P	.187	.328	.082	.015	+

LPMT / Positive Top

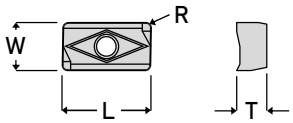

Available Grades

Insert #	R	L	W	T	B1M	K11	K22
LPMT-52-532	.031	.600	.320	.208	+	+	-
LPMT-52-533	.047	.600	.320	.208	-	+	+
LPMT-52-534	.062	.600	.320	.208	-	+	+

MGH / Positive Top

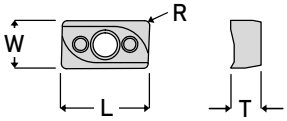

Available Grades

Insert #	R	L	W	T	B1M	K11
MGH-151	.002	.250	.170	.080	+	
MGH-1510	.008	.250	.170	.080	-	
MGH-1511	.015	.250	.170	.080	-	
MGH-2321	.015	.400	.250	.140	-	
MGH-2322	.031	.400	.250	.140	+	
MGH-2323	.047	.400	.250	.140	-	
MGH-2324	.062	.400	.250	.140	-	
MGH-531A	.015	.562	.313	.190	-	+
MGH-532A	.031	.562	.313	.190	+	
MGH-534A	.062	.562	.313	.190	-	
MGH-536A	.093	.562	.313	.190	-	
MGH-538A	.125	.562	.313	.190	-	
MGH-5310B	.156	.562	.313	.190	-	
MGH-5312B	.187	.562	.313	.190	-	
MGH-5314B	.218	.562	.313	.190	-	
MGH-5316B	.250	.562	.313	.190	-	

ODEB / Positive Top

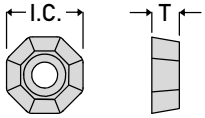

Available Grades

Insert #	I.C.	T	B1M	K11
ODEB-2711	.343	.110	-	+
ODEB-2721	.343	.130	+	+

ONMB / Positive Top - Double Sided

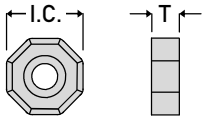

Available Grade

Insert #	I.C.	T	K11
ONMB-85	1.000	.312	+

ONPG / Positive Top - Double Sided

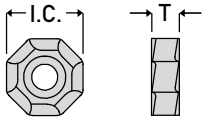

Available Grade

Insert #	I.C.	T	K11
ONPG-4532	.593	.220	+

OPEB / Positive Top

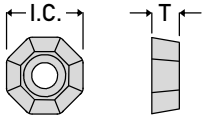

Available Grades

Insert #	I.C.	T	B1M	D66	K11	K22
OPEB-535	.625	.220	-	+	+	-
OPEB-535XP	.625	.220	+	-	-	+

RCEB / Positive Top

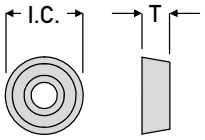

Available Grades

Insert #	I.C.	T	Ground	Molded	B1M	K11	K22
RCEB-22	.250	.125	-	+	-	+	-
RCEB-22G	.250	.125	+	-	+	+	+
RCEB-25G	.312	.125	+	-	+	+	+
RCEB-325	.375	.156	-	+	-	+	-
RCEB-325G	.375	.156	+	-	+	+	+
RCEB-435	.500	.220	-	+	-	+	-
RCEB-435G	.500	.220	+	-	+	+	+
RCEB-53G	.625	.220	+	-	+	+	+
RCEB-64	.750	.250	-	+	-	+	-

RDEB / Positive Top

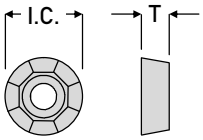

Insert #	I.C.	T	Available Grade K11
RDEB-2721	.343	.130	+

RNEB / Positive Top - Single Sided

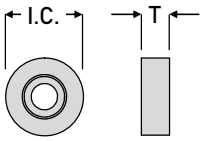

Insert #	I.C.	T	Available Grade K11
RNEB-85P	1.000	.312	+

RNMB / Positive Top - Double Sided

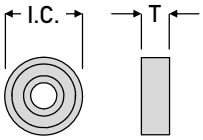

Insert #	I.C.	T	Available Grade K11
RNMB-85	1.000	.312	+

RPEB / Positive Top

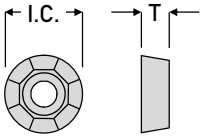

Insert #	I.C.	T	Available Grade K11
RPEB-535	.625	.220	+

SDCS / 60°

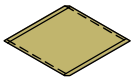

Insert #	Grade
601	A1M
602	

SDCS / 82°

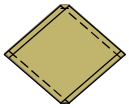

Insert #	Grade
820	A1M
821	
822	
823	

SDCS / 90°

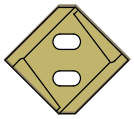

Insert #	Grade
90-500	A1M
90-625	
90-750	

SDCS / 90°

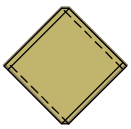

Insert #	Grade
90	A1M
900	
901	
902	
9025	
903	

SDCS / 90°Chipbreaker

Insert #	Grade
901CB	A1M
902CB	
9025CB	
903CB	

SDCS / 100°

Insert #	Grade
100	A1M
1001	
1002	

SDCS / 120°

Insert #	Grade
1201	A1M
1202	

SDCS / 135°

Insert #	Grade
1351	A1M
1352	

SDCS / 142°

Insert #	Grade
142-500	A1M
142-750	

SDCS / 90°Chipbreaker

Insert #	Grade
902CB CPM4	A1M
9025CB CPM4	
903CB CPM4	

SDEB / Chipbreaker

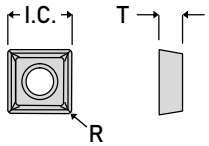

Insert #	I.C.	T	R	Available Grades K11	K22
SDEB-1511CB	.187	.082	.015		
SDEB-2151CB	.250	.093	.015	+	+
SDEB-2522CB	.312	.125	.031		

SDEB / Flat Top

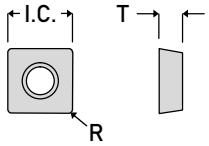

Insert #	I.C.	T	R	Available Grade K11
SDEB-2151F	.250	.093	.015	+

SDEB / Positive Top

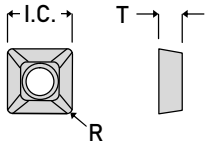

Insert #	I.C.	T	R	Available Grade K11
SDEB-2151P	.250	.093	.015	
SDEB-2521P	.312	.125	.015	+
SDEB-2522P	.312	.125	.031	

SNEB / Positive Top

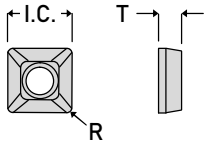

Insert #	I.C.	T	R	Available Grades K11
SNEB-432PA	.500	.187	.031	+

SNGC / H Series - Serator Inserts

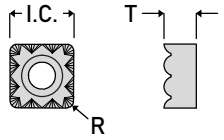

Insert #	I.C.	T	R	Available Grade K11
SNGC-444H	.500	.250	.062	+

SNMC / B Series - Serator Inserts

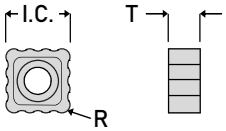

Insert #	I.C.	T	R	Available Grade K11
SNMC-222B	.250	.125	.031	
SNMC-333B	.375	.187	.047	+
SNMC-444B	.500	.250	.062	

SNMC / P Series - Serator Inserts

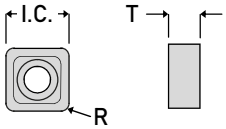

Insert #	I.C.	T	R	Available Grades D66	K11
SNMC-221P	.250	.125	.015	-	
SNMC-332P	.375	.187	.031	-	+
SNMC-443P	.500	.250	.047	+	

SNPG / Positive Top - Double Sided

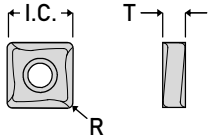

Insert #	I.C.	T	R	Available Grade K11
SNPG-2522	.312	.125	.031	+
SNPG-3532	.437	.187	.031	

SPEB / Chipbreaker

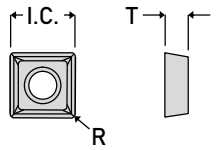

Insert #	I.C.	T	R	Available Grades K11	K22
SPEB-1511CB	.187	.082	.015	+	+
SPEB-1512CB	.187	.082	.031	+	+
SPEB-221CB	.250	.125	.015	+	+
SPEB-222CB	.250	.125	.031	+	+
SPEB-2521CB	.312	.125	.015	+	+
SPEB-2522CB	.312	.125	.031	+	+
SPEB-322CB	.375	.125	.031	+	+
SPEB-332CB	.375	.187	.031	+	+
SPEB-422CB	.500	.125	.031	+	+
SPEB-432CB	.500	.187	.031	+	+
SPEB-532CB	.625	.187	.031	+	+
SPEB-6352CB	.750	.220	.031	+	+
SPEB-842CB	1.000	.250	.031	+	-

SPEB / Flat Top

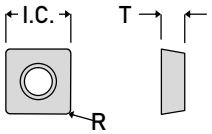

Insert #	I.C.	T	R	Available Grade K11
SPEB-222F	.250	.125	.031	
SPEB-322F	.375	.125	.031	+
SPEB-422F	.500	.125	.031	

SPEB / Positive Top

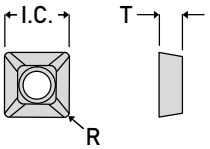

Insert #	I.C.	T	R	Available Grades B1M	D66	K11	K22
SPEB-220P	.250	.125	.003	-	-	+	-
SPEB-221P	.250	.125	.015	-	-	+	-
SPEB-222P	.250	.125	.031	+	+	+	+
SPEB-2521P	.312	.125	.015	-	-	+	-
SPEB-2522P	.312	.125	.031	+	+	+	+
SPEB-321P	.375	.125	.015	-	-	+	-
SPEB-322P	.375	.125	.031	+	+	+	+
SPEB-331P	.375	.187	.015	-	-	+	-
SPEB-332P	.375	.187	.031	+	+	+	+
SPEB-333P	.375	.187	.047	-	-	+	-
SPEB-334P	.375	.187	.062	-	-	+	+
SPEB-3522PA	.437	.125	.031	-	-	+	-
SPEB-422PA	.500	.125	.031	-	-	+	-
SPEB-431PA	.500	.187	.015	-	-	+	-
SPEB-432PA	.500	.187	.031	+	+	+	+
SPEB-433PA	.500	.187	.047	-	+	+	-
SPEB-434PA	.500	.187	.062	-	-	+	+
SPEB-43PA45	.500	.187	.05 X 45°	-	-	+	-
SPEB-532PA	.625	.187	.031	-	+	+	+
SPEB-6352PA	.750	.220	.031	-	+	+	+
SPEB-842PA	1.000	.250	.031	-	-	+	-

Attention: As stock of our discontinued inventory is becoming sold out, many inserts are now available in new grades
Please refer to the data on our web site www.ktoolinc.com for the most up to date grade information

Questions? Call 1-800-377-3056

Insert Grades

Insert Grades	Grade Descriptions
B1M	Uncoated Carbide - No Hone
D66	Multi-Layer Dense Coating
K11	Universal High Performance Dense Coating
K22	Ultra Smooth Dense Coating - No Hone

Insert Grade Selection

Material	Material Examples	Preferred Grade
High & Low Carbon Steels	1018, 1020, 1117, 1141, 12L14	K11
High Carbon & Alloy Steels	1045, 4140, 4340, 52100, 8620	K11
Lower Carbon Tool Steels	P-20, H-13, S-7	K11
Tool Steels	A-2, A-6, D-2, M-2	K11
Stainless Steels	303, 304, 316, 420, 15-5PH, 17-4PH	K11
Iron	Cast, Nodular	D66
Iron	Ductile	K11
Nickel & Titanium Alloys	Inconel, Hastelloy, TI-6AL-4V	K11
Non-Ferrous Metals	Aluminum, Bronze, Brass	K22 / BI1M / K11

Spot Drills

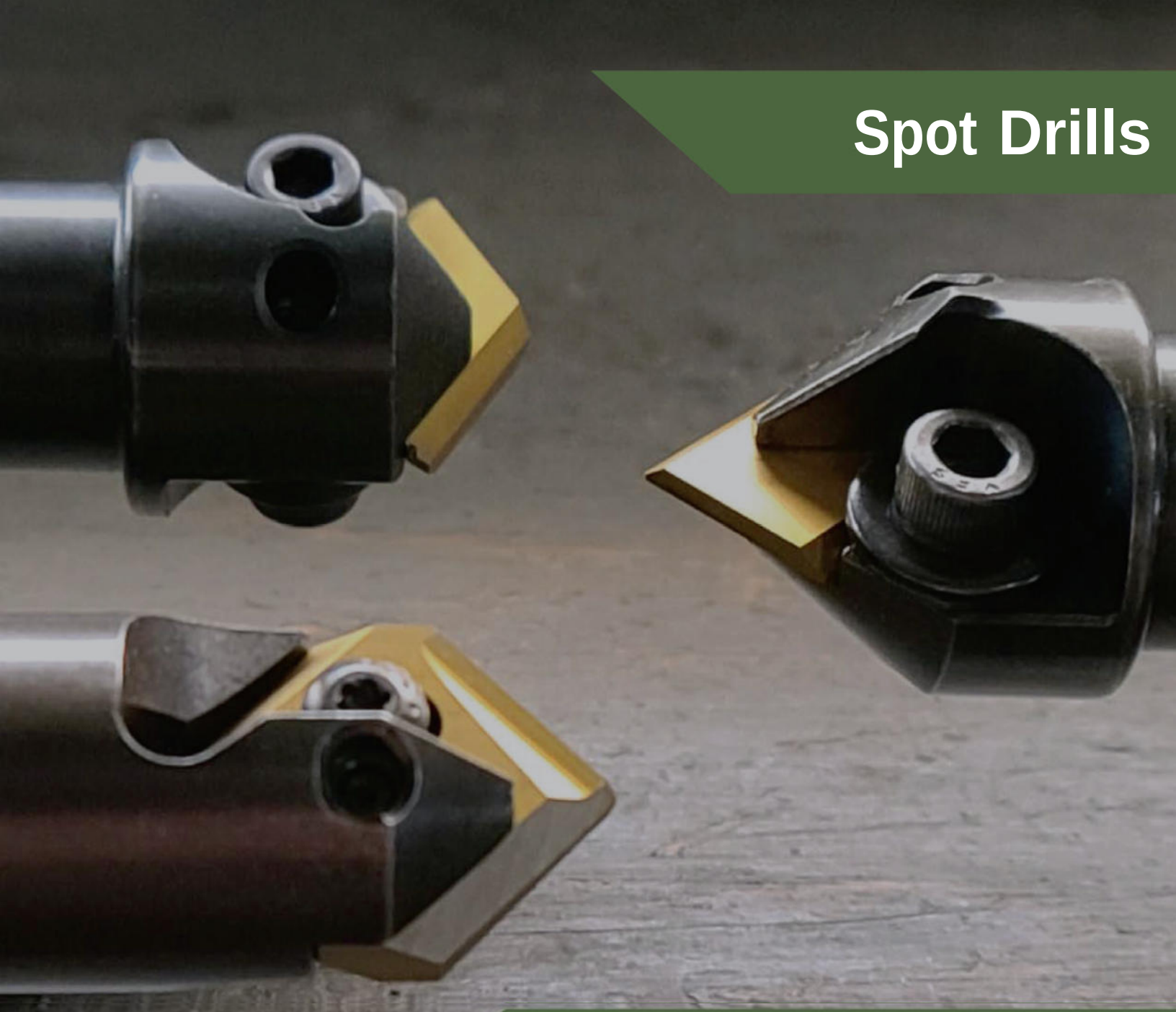

Insert Loading Procedure
Air Blast Pocket Clean
Hold Insert in Place (Chisel points to front and rear)
Flatted corners are to prevent loading insert backwards
Tighten clamps until each one makes light contact
Alternate tightening screws several times until screws are tight

Patented (Patent # 5,259,707) - 2 Flutes Effective
Must Be Held in a Collet (No Flat)
Wide Variety of Angles Available

(Patent # 5,259,707)

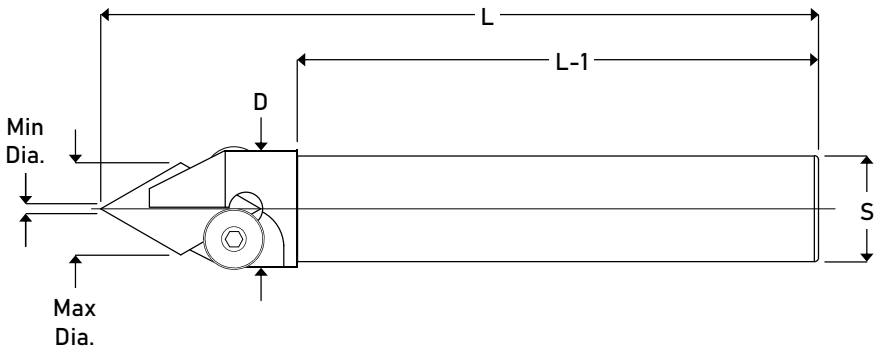

Tool Info.

Tool #	Min Dia.	Max Dia.	L	L-1	S	D	Clamp	Screw	Insert
SDCS-601L	.156	.540	5.450	4.250	.750	1.000	501912	103212	601
SDCS-602L	.250	.750	6.700	4.875	1.000	1.120	621915	103212	602

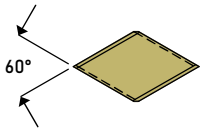

Insert	Grade
601	A1M
602	

Speed and Feed Info.

Material	S.F.M.	I.P.R.	Insert Grade
Mild & Low Carbon Steel *Ex. 1018, 1020, 1117, 1141, 12L14*	500 - 700	.0024	A1M
High Carbon & Alloy Steel *Ex. 1045, 4140, 4340, 52100, 8620*	400 - 600	.0016	A1M
Lower Carbon Tool Steel *Ex. P-20, H-13, S-7*	400 - 600	.002	A1M
Tool Steel *Ex. A-2, A-6, D-2, M-2*	300 - 600	.002	A1M
Stainless Steel *Ex. 304, 316, 420, 15-5PH, 17-4PH*	200 - 400	.0014	A1M
Iron *Ex. Cast, Ductile, Nodular*	400 - 700	.004	A1M
Nickel & Titanium Alloy *Ex. Inconel, Hastelloy, TI-6AL-4V*	120 - 250	.0012	A1M
Non-Ferrous Metal *Ex. Aluminum, Bronze, Brass*	1000 - 2000	.006	A1M

K-Tool, Inc.

(Patent # 5,259,707)

SDCS

Spot Drills

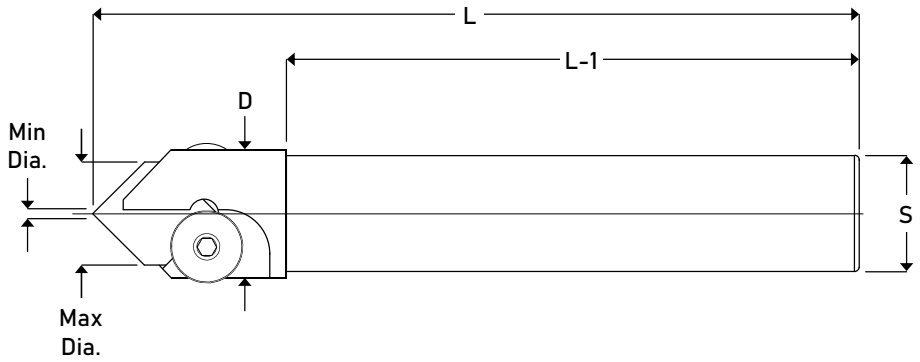

Tool Info.

Tool #	Min Dia.	Max Dia.	L	L-1	S	D	Clamp	Screw	Insert
SDCS-820	.093	.400	3.250	2.375	.500	.625	311205	44025	820
SDCS-821L	.156	.580	5.360	4.250	.750	1.000	501912	103212	821
SDCS-822L	.250	.880	6.535	4.875	1.000	1.120	621915	103212	822
SDCS-823	.250	1.500	4.937	2.500	1.000	1.500	621915	103212	823

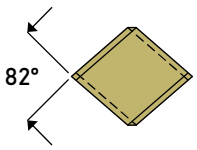

Insert	Grade
820	A1M
821	
822	
823	

Speed and Feed Info.

Material	S.F.M.	I.P.R.	Insert Grade
Mild & Low Carbon Steel *Ex. 1018, 1020, 1117, 1141, 12L14*	500 - 700	.0024	A1M
High Carbon & Alloy Steel *Ex. 1045, 4140, 4340, 52100, 8620*	400 - 600	.0016	A1M
Lower Carbon Tool Steel *Ex. P-20, H-13, S-7*	400 - 600	.002	A1M
Tool Steel *Ex. A-2, A-6, D-2, M-2*	300 - 600	.002	A1M
Stainless Steel *Ex. 304, 316, 420, 15-5PH, 17-4PH*	200 - 400	.0014	A1M
Iron *Ex. Cast, Ductile, Nodular*	400 - 700	.004	A1M
Nickel & Titanium Alloy *Ex. Inconel, Hastelloy, TI-6AL-4V*	120 - 250	.0012	A1M
Non-Ferrous Metal *Ex. Aluminum, Bronze, Brass*	1000 - 2000	.006	A1M

(Patent # 5,259,707)

-Designed for spotting along shoulders-

-Split point design for reduced cutting pressure-

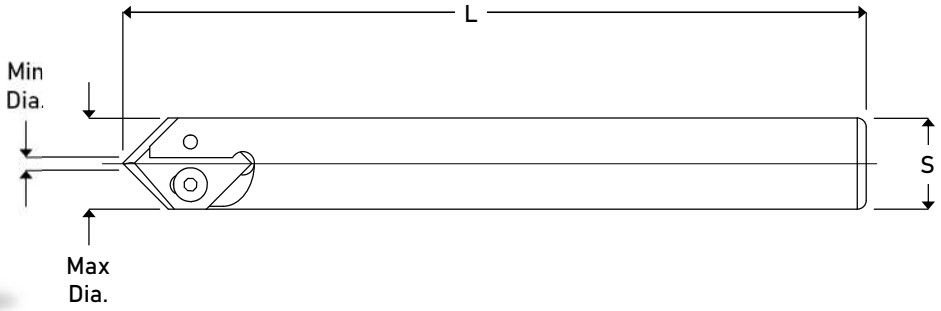

SDCS

Spot Drills

Tool Info.

Tool #	Min Dia.	Max Dia.	L	S	Washer	Screw	Wrench	Insert
SDCS-90-500	.093	.500	4.000	.500	251207	325B	1/16" Allen	90-500
SDCS-90-625	.100	.625	5.000	.625	251207	425B	T-8	90-625
SDCS-90-750	.125	.750	6.000	.750	251603	638B	T-10	90-750

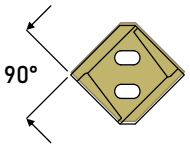

Insert	Grade
90-500	
90-625	A1M
90-750	

Speed and Feed Info.

Material	S.F.M.	I.P.R.	Insert Grade
Mild & Low Carbon Steel *Ex. 1018, 1020, 1117, 1141, 12L14*	500 - 700	.002 - .004	A1M
High Carbon & Alloy Steel *Ex. 1045, 4140, 4340, 52100, 8620*	400 - 600	.002 - .004	A1M
Lower Carbon Tool Steel *Ex. P-20, H-13, S-7*	400 - 600	.002 - .004	A1M
Tool Steel *Ex. A-2, A-6, D-2, M-2*	300 - 600	.002 - .004	A1M
Stainless Steel *Ex. 304, 316, 420, 15-5PH, 17-4PH*	200 - 400	.002 - .004	A1M
Iron *Ex. Cast, Ductile, Nodular*	400 - 700	.002 - .004	A1M
Nickel & Titanium Alloy *Ex. Inconel, Hastelloy, TI-6AL-4V*	120 - 250	.0012 - .0022	A1M
Non-Ferrous Metal *Ex. Aluminum, Bronze, Brass*	1000 - 2000	.003 - .008	A1M

K-Tool, Inc.

(Patent # 5,259,707)

SDCS

Spot Drills

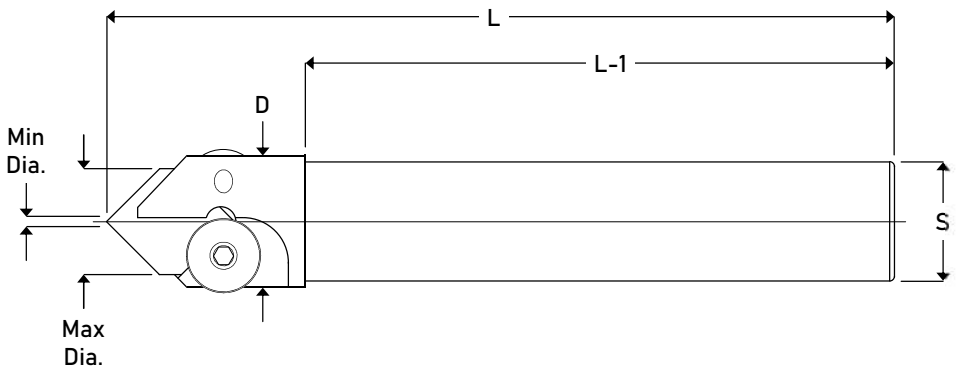

Tool Info.

Tool #	Min Dia.	Max Dia.	L	L-1	S	D	Clamp	Screw	Insert
SDCS-90	.070	.390	3.250	2.500	.375	.430	180310	25618	90
SDCS-900	.093	.470	3.250	2.375	.500	.625	311205	44025	900
SDCS-901	.156	.600	3.060	2.000	.500	1.000	501912	103212	901
SDCS-901L	.156	.600	5.330	4.250	.750	1.000	501912	103212	901
SDCS-902	.250	.900	4.130	2.500	.750	1.125	621915	103212	902
SDCS-902L	.250	.900	6.530	4.875	1.000	1.125	621915	103212	902
SDCS-9025	.250	1.270	4.690	2.625	1.000	1.250	621915	103212	9025
SDCS-903	.375	1.560	4.880	2.625	1.000	1.700	102518	142812	903

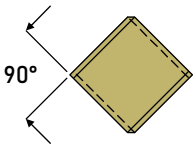

Insert	Grade
90	A1M
900	
901	
902	
9025	
903	

Chipbreaker Inserts	Grade
901CB	A1M
902CB	
9025CB	
902CB CPM4	
903CB CPM4	

Speed and Feed Info.

Material	S.F.M.	I.P.R.	Insert Grade
Mild & Low Carbon Steel *Ex. 1018, 1020, 1117, 1141, 12L14*	500 - 700	.0024	A1M
High Carbon & Alloy Steel *Ex. 1045, 4140, 4340, 52100, 8620*	400 - 600	.0016	A1M
Lower Carbon Tool Steel *Ex. P-20, H-13, S-7*	400 - 600	.002	A1M
Tool Steel *Ex. A-2, A-6, D-2, M-2*	300 - 600	.002	A1M
Stainless Steel *Ex. 304, 316, 420, 15-5PH, 17-4PH*	200 - 400	.0014	A1M
Iron *Ex. Cast, Ductile, Nodular*	400 - 700	.004	A1M
Nickel & Titanium Alloy *Ex. Inconel, Hastelloy, Ti-6AL-4V*	120 - 250	.0012	A1M
Non-Ferrous Metal *Ex. Aluminum, Bronze, Brass*	1000 - 2000	.006	A1M

(Patent # 5,259,707)

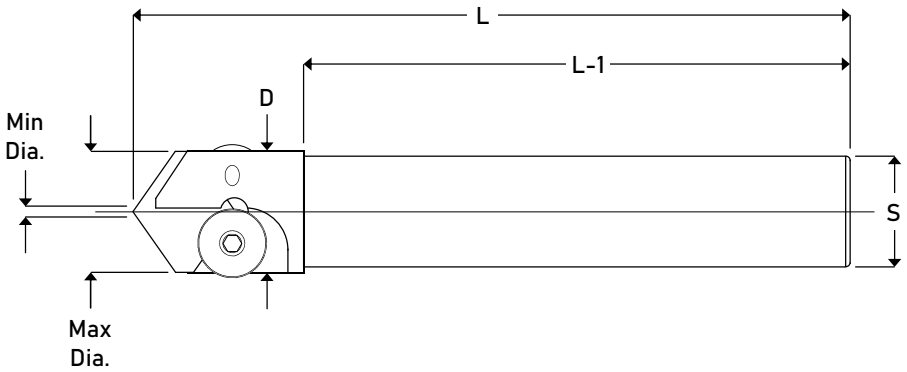

Tool Info.

Tool #	Min Dia.	Max Dia.	L	L-1	S	D	Clamp	Screw	Insert
SDCS-100	.093	.470	3.210	2.375	.500	.625	311205	44025	100
SDCS-1001L	.156	.630	5.310	4.250	.750	1.000	501912	103212	1001
SDCS-1002L	.250	1.030	6.500	4.875	1.000	1.125	621915	103212	1002

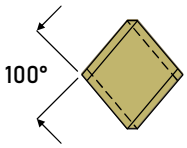

Insert	Grade
100	A1M
1001	
1002	

Speed and Feed Info.

Material	S.F.M.	I.P.R.	Insert Grades
Mild & Low Carbon Steel *Ex. 1018, 1020, 1117, 1141, 12L14*	500 - 700	.0024	A1M
High Carbon & Alloy Steel *Ex. 1045, 4140, 4340, 52100, 8620*	400 - 600	.0016	A1M
Lower Carbon Tool Steel *Ex. P-20, H-13, S-7*	400 - 600	.002	A1M
Tool Steel *Ex. A-2, A-6, D-2, M-2*	300 - 600	.002	A1M
Stainless Steel *Ex. 304, 316, 420, 15-5PH, 17-4PH*	200 - 400	.0014	A1M
Iron *Ex. Cast, Ductile, Nodular*	400 - 700	.004	A1M
Nickel & Titanium Alloy *Ex. Inconel, Hastelloy, TI-6AL-4V*	120 - 250	.0012	A1M
Non-Ferrous Metal *Ex. Aluminum, Bronze, Brass*	1000 - 2000	.006	A1M B1M

(Patent # 5,259,707)

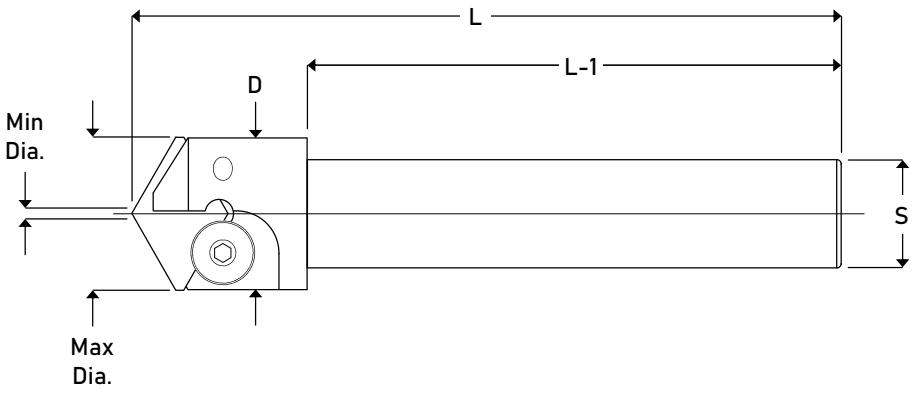

Tool Info.

Tool #	Min Dia.	Max Dia.	L	L-1	S	D	Clamp	Screw	Insert
SDCS-1201L	.156	.875	5.300	4.250	.750	1.000	501912	103212	1201
SDCS-1202L	.250	1.300	6.437	4.875	1.000	1.350	621915	103212	1202

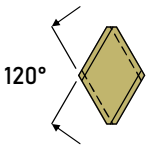

Insert	Grade
1201	A1M
1202	

Speed and Feed Info.

Material	S.F.M.	I.P.R.	Insert Grade
Mild & Low Carbon Steel *Ex. 1018, 1020, 1117, 1141, 12L14*	500 - 700	.0024	A1M
High Carbon & Alloy Steel *Ex. 1045, 4140, 4340, 52100, 8620*	400 - 600	.0016	A1M
Lower Carbon Tool Steel *Ex. P-20, H-13, S-7*	400 - 600	.002	A1M
Tool Steel *Ex. A-2, A-6, D-2, M-2*	300 - 600	.002	A1M
Stainless Steel *Ex. 304, 316, 420, 15-5PH, 17-4PH*	200 - 400	.0014	A1M
Iron *Ex. Cast, Ductile, Nodular*	400 - 700	.004	A1M
Nickel & Titanium Alloy *Ex. Inconel, Hastelloy, TI-6AL-4V*	120 - 250	.0012	A1M
Non-Ferrous Metal *Ex. Aluminum, Bronze, Brass*	1000 - 2000	.006	A1M

(Patent # 5,259,707)

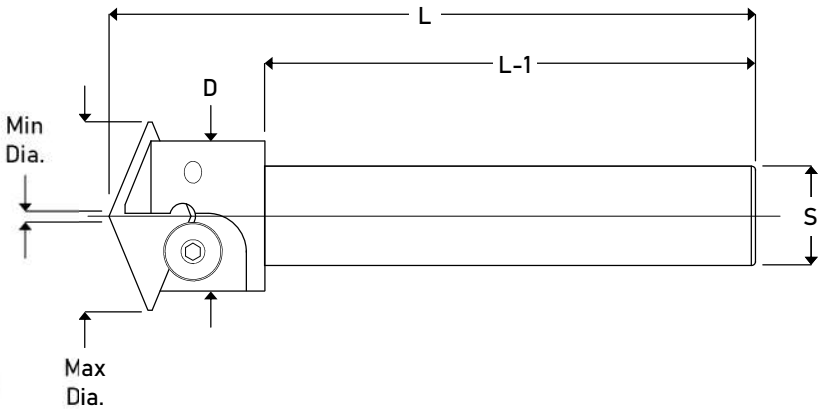

Tool Info.

Tool #	Min Dia.	Max Dia.	L	L-1	S	D	Clamp	Screw	Insert
SDCS-1351L	.156	1.062	5.290	4.250	.750	1.000	501912	103212	1351
SDCS-1352L	.250	1.625	6.400	4.875	1.000	1.600	621915	103212	1352

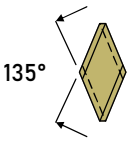

Insert	Grade
1351	A1M
1352	

Speed and Feed Info.

Material	S.F.M.	I.P.R.	Grade
Mild & Low Carbon Steel *Ex. 1018, 1020, 1117, 1141, 12L14*	500 - 700	.0024	A1M
High Carbon & Alloy Steel *Ex. 1045, 4140, 4340, 52100, 8620*	400 - 600	.0016	A1M
Lower Carbon Tool Steel *Ex. P-20, H-13, S-7*	400 - 600	.002	A1M
Tool Steel *Ex. A-2, A-6, D-2, M-2*	300 - 600	.002	A1M
Stainless Steel *Ex. 304, 316, 420, 15-5PH, 17-4PH*	200 - 400	.0014	A1M
Iron *Ex. Cast, Ductile, Nodular*	400 - 700	.004	A1M
Nickel & Titanium Alloy *Ex. Inconel, Hastelloy, TI-6AL-4V*	120 - 250	.0012	A1M
Non-Ferrous Metal *Ex. Aluminum, Bronze, Brass*	1000 - 2000	.006	A1M

K-Tool, Inc.

-Designed for spotting along shoulders-

-Split point design for reduced cutting pressure-

SDCS

Spot Drills

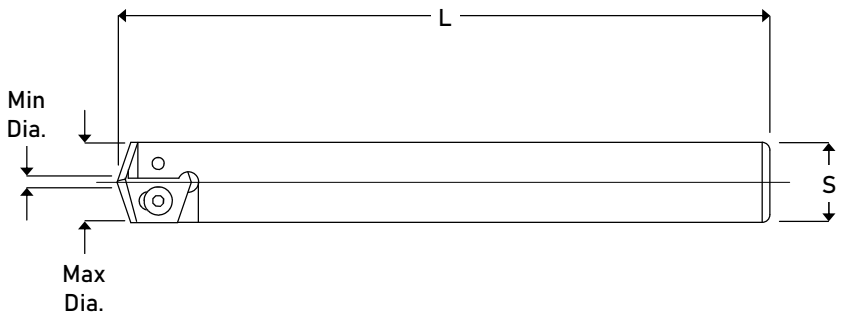

Tool Info.

Tool #	Min Dia.	Max Dia.	L	S	Washer	Screw	Wrench	Insert
SDCS-142-500	.093	.500	4.000	.500	251207	325B	1/16" Allen	142-500
SDCS-142-750	.125	.750	6.000	.750	251603	638B	T-10	142-750

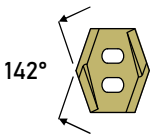

Insert #	Grade
142-500	A1M
142-750	

Speed and Feed Info.

Material	S.F.M.	I.P.R.	Insert Grade
Mild & Low Carbon Steel *Ex. 1018, 1020, 1117, 1141, 12L14*	500 - 700	.002 - .004	A1M
High Carbon & Alloy Steel *Ex. 1045, 4140, 4340, 52100, 8620*	400 - 600	.002 - .004	A1M
Lower Carbon Tool Steel *Ex. P-20, H-13, S-7*	400 - 600	.002 - .004	A1M
Tool Steel *Ex. A-2, A-6, D-2, M-2*	300 - 600	.002 - .004	A1M
Stainless Steel *Ex. 304, 316, 420, 15-5PH, 17-4PH*	200 - 400	.002 - .004	A1M
Iron *Ex. Cast, Ductile, Nodular*	400 - 700	.002 - .004	A1M
Nickel & Titanium Alloy *Ex. Inconel, Hastelloy, TI-6AL-4V*	120 - 250	.0012 - .0022	A1M
Non-Ferrous Metal *Ex. Aluminum, Bronze, Brass*	1000 - 2000	.003 - .008	A1M

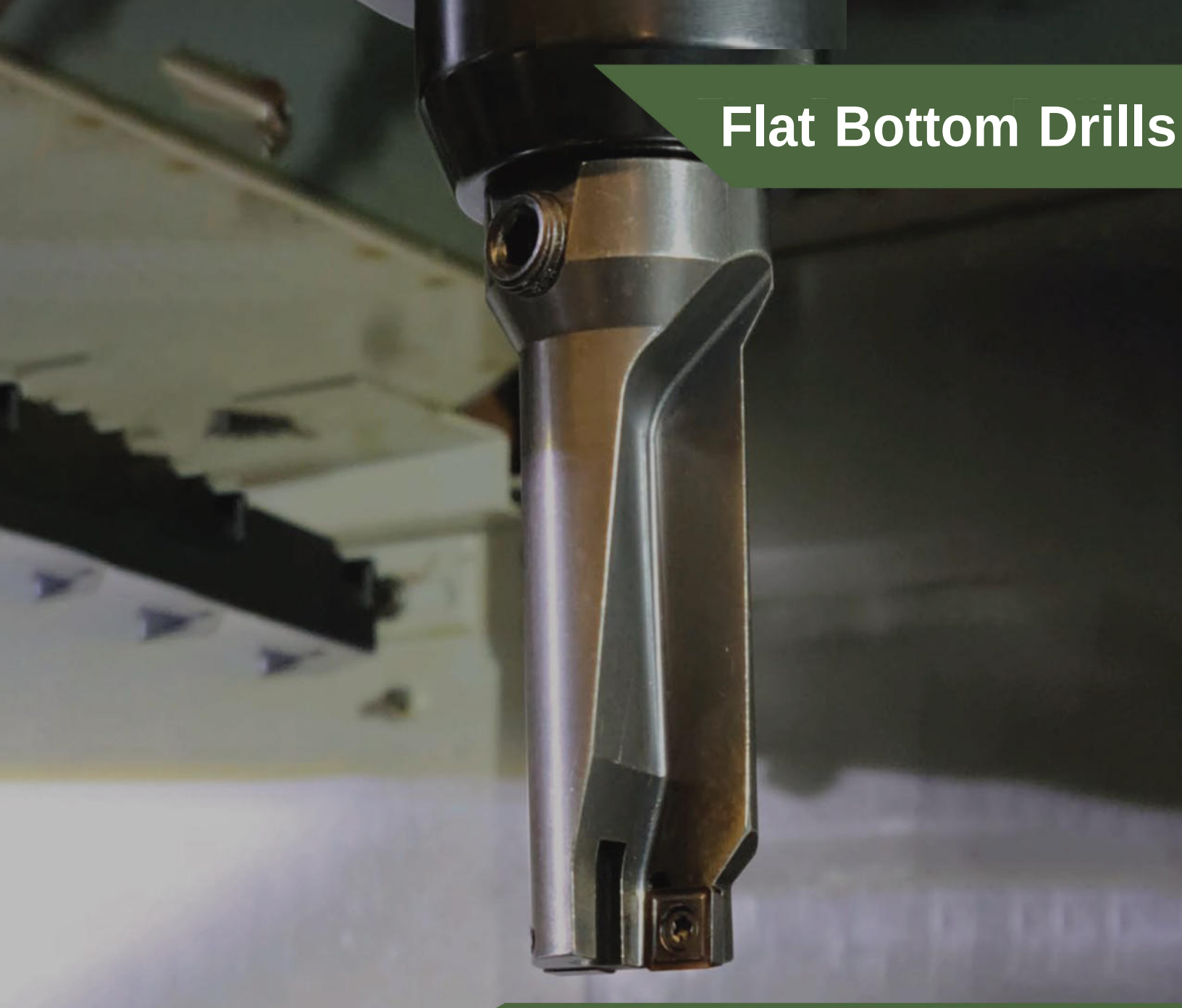

Flat Bottom Drills

Drills from Solid
Cuts a Flat Bottom Within .001
Boring Capabilities - Coolant Thru - Helical Flutes
Available in 2:1 & 3:1 (Most Sizes)
Side & Rear Coolant Ports

K-Tool, Inc.

FB

Flat Bottom Drills

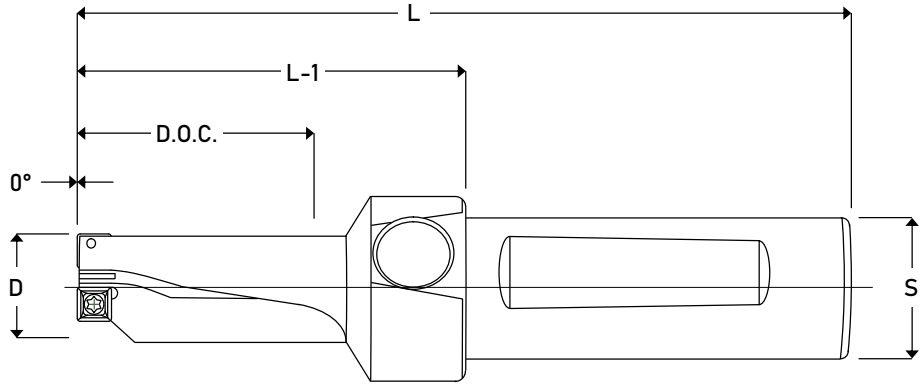

Coolant Thru Standard

Tool Info.

Tool #	D	Flutes	L	L-1	D.O.C.	S	Coolant Plug	Insert
FB-500	.500	2-1 Effective	4.000	2.000	1.125	.750	NPT 1/8	SPEB-1511CB
FB-500-3	.500	2-1 Effective	4.500	2.500	1.500			
FB-531	.531	2-1 Effective	4.000	2.000	1.125			
FB-531-3	.531	2-1 Effective	4.500	2.500	1.593			
FB-562	.562	2-1 Effective	4.000	2.000	1.125			
FB-562-3	.562	2-1 Effective	4.625	2.625	1.687			
FB-593	.593	2-1 Effective	4.000	2.000	1.187			
FB-593-3	.593	2-1 Effective	4.687	2.687	1.812			
FB-625	.625	2-1 Effective	4.250	2.250	1.375			
FB-625-3	.625	2-1 Effective	4.750	2.750	1.875			
FB-656	.656	2-1 Effective	4.250	2.250	1.375			
FB-656-3	.656	2-1 Effective	4.875	2.875	2.000			

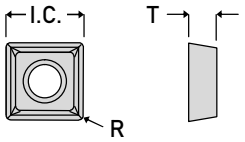

Insert Info

SPEB-1511CB		
Grades	K11	K22
I.C.	.187	
T	.082	
R	.015	
Screw	164T	
Wrench	T-6	

Speed and Feed Info.

Material	S.F.M.	I.P.R.
Mild & Low Carbon Steel *Ex. 1018, 1020, 1117, 1141, 12L14*	800 - 1200	.001 - .003
High Carbon & Alloy Steel *Ex. 1045, 4140, 4340, 52100, 8620*	500 - 800	.001 - .003
Lower Carbon Tool Steel *Ex. P-20, H-13, S-7*	400 - 700	.001 - .003
Tool Steel *Ex. A-2, A-6, D-2, M-2*	300 - 600	.001 - .003
Stainless Steel *Ex. 304, 316, 420, 15-5PH, 17-4PH*	300 - 600	.001 - .003
Iron *Ex. Cast, Ductile, Nodular*	600 - 1000	.002 - .003
Nickel & Titanium Alloy *Ex. Inconel, Hastelloy, TI-6AL-4V*	120 - 180	.001 - .0015
Non-Ferrous Metal *Ex. Aluminum, Bronze, Brass*	1000 - 2500	.002 - .003

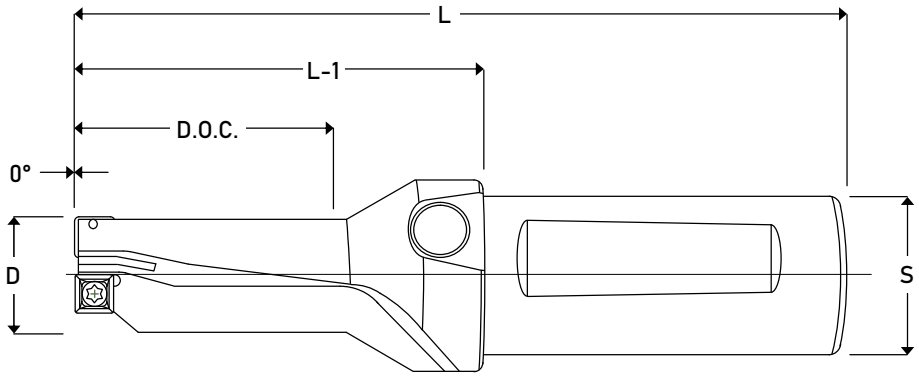

Coolant Thru Standard

Tool Info.

Tool #	D	Flutes	L	L-1	D.O.C.	S	Coolant Plug	Insert
FB-687	.687	2-1 Effective	4.250	2.250	1.375	.750	NPT 1/8	SPEB-221CB
FB-687-3	.687	2-1 Effective	4.937	2.937	2.062	.750		
FB-718	.718	2-1 Effective	4.250	2.250	1.437	.750		
FB-718-3	.718	2-1 Effective	5.062	3.062	2.187	.750		
FB-750	.750	2-1 Effective	4.750	2.500	1.500	1.000		
FB-750-3	.750	2-1 Effective	5.500	3.250	2.250	1.000		
FB-781	.781	2-1 Effective	4.750	2.500	1.562	1.000		
FB-781-3	.781	2-1 Effective	5.500	3.250	2.343	1.000		
FB-812	.812	2-1 Effective	4.750	2.500	1.625	1.000		
FB-812-3	.812	2-1 Effective	5.625	3.375	2.437	1.000		

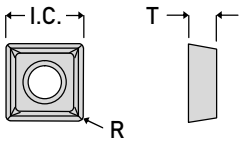

Insert Info

SPEB-221CB	
Grades	K11 K22
I.C.	.250
T	.125
R	.015
Screw	314T
Wrench	T-8

Speed and Feed Info.

Material	S.F.M.	I.P.R.
Mild & Low Carbon Steel *Ex. 1018, 1020, 1117, 1141, 12L14*	800 - 1200	.002 - .004
High Carbon & Alloy Steel *Ex. 1045, 4140, 4340, 52100, 8620*	500 - 800	.002 - .003
Lower Carbon Tool Steel *Ex. P-20, H-13, S-7*	400 - 700	.002 - .003
Tool Steel *Ex. A-2, A-6, D-2, M-2*	300 - 600	.001 - .003
Stainless Steel *Ex. 304, 316, 420, 15-5PH, 17-4PH*	300 - 600	.001 - .003
Iron *Ex. Cast, Ductile, Nodular*	600 - 1000	.002 - .005
Nickel & Titanium Alloy *Ex. Inconel, Hastelloy, TI-6AL-4V*	120 - 180	.001 - .002
Non-Ferrous Metal *Ex. Aluminum, Bronze, Brass*	1000 - 2500	.003 - .006

K-Tool, Inc.

FB

Flat Bottom Drills

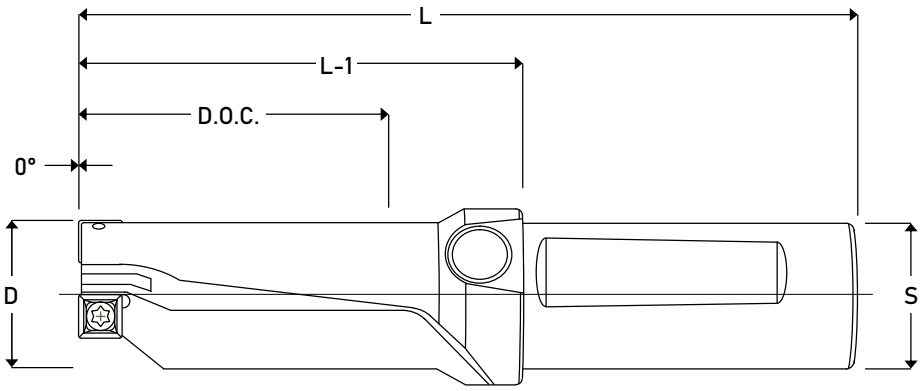

Coolant Thru Standard

Tool Info.

Tool #	D	Flutes	L	L-1	D.O.C.	S	Coolant Plug	Insert
FB-875	.875	2-1 Effective	5.000	2.750	1.750			
FB-875-3	.875	2-1 Effective	5.750	3.500	2.625			
FB-937	.937	2-1 Effective	5.000	2.750	1.875			
FB-937-3	.937	2-1 Effective	6.000	3.750	2.812			
FB-984	.984	2-1 Effective	5.250	3.000	2.000			
FB-984-3	.984	2-1 Effective	6.125	3.875	2.950			
FB-1000	1.000	2-1 Effective	5.250	3.000	2.000	1.000	NPT 1/8	SPEB-2522CB
FB-1000-3	1.000	2-1 Effective	6.250	4.000	3.000			
FB-1031	1.031	2-1 Effective	5.250	3.000	2.062			
FB-1031-3	1.031	2-1 Effective	6.250	4.000	3.093			
FB-1062	1.062	2-1 Effective	5.250	3.000	2.125			
FB-1062-3	1.062	2-1 Effective	6.250	4.000	3.187			
FB-1125	1.125	2-1 Effective	5.250	3.000	2.250			
FB-1125-3	1.125	2-1 Effective	6.375	4.125	3.375			

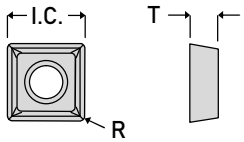

Insert Info

SPEB-2522CB	
Grades	K11 K22
I.C.	.312
T	.125
R	.031
Screw	314T
Wrench	T-8

Speed and Feed Info.

Material	S.F.M.	I.P.R.
Mild & Low Carbon Steel *Ex. 1018, 1020, 1117, 1141, 12L14*	800 - 1200	.002 - .004
High Carbon & Alloy Steel *Ex. 1045, 4140, 4340, 52100, 8620*	500 - 800	.002 - .003
Lower Carbon Tool Steel *Ex. P-20, H-13, S-7*	400 - 700	.002 - .003
Tool Steel *Ex. A-2, A-6, D-2, M-2*	300 - 600	.001 - .003
Stainless Steel *Ex. 304, 316, 420, 15-5PH, 17-4PH*	300 - 600	.001 - .003
Iron *Ex. Cast, Ductile, Nodular*	600 - 1000	.002 - .005
Nickel & Titanium Alloy *Ex. Inconel, Hastelloy, TI-6AL-4V*	120 - 180	.001 - .002
Non-Ferrous Metal *Ex. Aluminum, Bronze, Brass*	1000 - 2500	.003 - .006

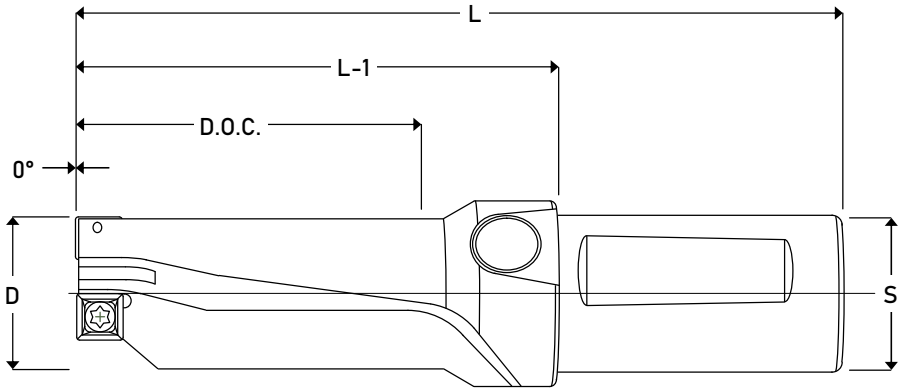

Coolant Thru Standard

Tool Info.

Tool #	D	Flutes	L	L-1	D.O.C.	S	Coolant Plug	Insert
FB-1156	1.156	2-1 Effective	6.000	3.750	2.312			
FB-1156-3	1.156	2-1 Effective	7.125	4.875	3.468			
FB-1187	1.187	2-1 Effective	6.000	3.750	2.375			
FB-1187-3	1.187	2-1 Effective	7.125	4.875	3.562			
FB-1250	1.250	2-1 Effective	6.000	3.750	2.500			
FB-1250-3	1.250	2-1 Effective	7.500	5.250	3.750	1.250	NPT 1/4	SPEB-332CB
FB-1281	1.281	2-1 Effective	6.000	3.750	2.562			
FB-1281-3	1.281	2-1 Effective	7.562	5.312	3.843			
FB-1312	1.312	2-1 Effective	6.000	3.750	2.625			
FB-1312-3	1.312	2-1 Effective	7.562	5.312	3.937			
FB-1375	1.375	2-1 Effective	6.000	3.750	2.750			
FB-1375-3	1.375	2-1 Effective	7.625	5.375	4.125			

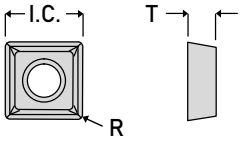

Insert Info

SPEB-332CB	
Grades	K11 K22
I.C.	.375
T	.187
R	.031
Screw	538T
Wrench	T-10

Speed and Feed Info.

Material	S.F.M.	I.P.R.
Mild & Low Carbon Steel *Ex. 1018, 1020, 1117, 1141, 12L14*	800 - 1200	.003 - .005
High Carbon & Alloy Steel *Ex. 1045, 4140, 4340, 52100, 8620*	500 - 800	.003 - .005
Lower Carbon Tool Steel *Ex. P-20, H-13, S-7*	400 - 700	.003 - .005
Tool Steel *Ex. A-2, A-6, D-2, M-2*	300 - 600	.002 - .004
Stainless Steel *Ex. 304, 316, 420, 15-5PH, 17-4PH*	300 - 600	.002 - .004
Iron *Ex. Cast, Ductile, Nodular*	600 - 1000	.003 - .006
Nickel & Titanium Alloy *Ex. Inconel, Hastelloy, TI-6AL-4V*	120 - 180	.002 - .003
Non-Ferrous Metal *Ex. Aluminum, Bronze, Brass*	1000 - 2500	.004 - .008

K-Tool, Inc.

FB

Flat Bottom Drills

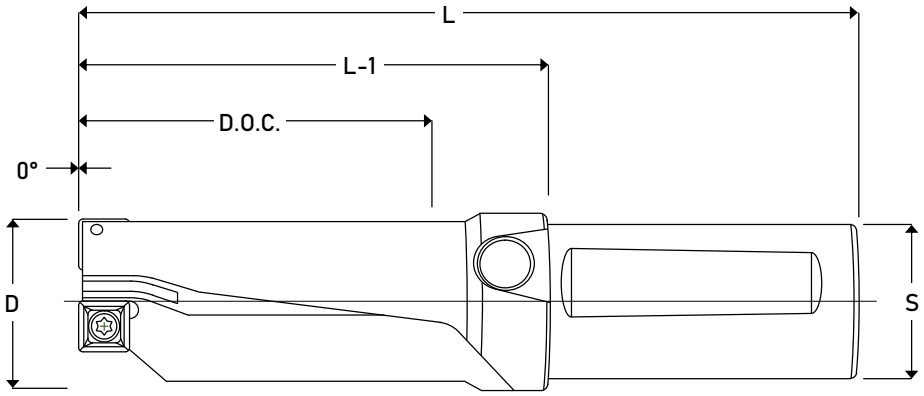

Coolant Thru Standard

Tool Info.

Tool #	D	Flutes	L	L-1	D.O.C.	S	Coolant Plug	Insert
FB-1437	1.437	2-1 Effective	6.250	4.000	2.875	1.250	NPT 1/4	SPEB-432CB
FB-1437-3	1.437	2-1 Effective	7.687	5.437	4.312	1.250		
FB-1500	1.500	2-1 Effective	6.250	4.000	3.000	1.250		
FB-1500-3	1.500	2-1 Effective	7.750	5.500	4.500	1.250		
FB-1562	1.562	2-1 Effective	7.500	4.500	3.125	1.500		
FB-1562-3	1.562	2-1 Effective	9.062	6.062	4.687	1.500		
FB-1625	1.625	2-1 Effective	7.500	4.500	3.250	1.500		
FB-1625-3	1.625	2-1 Effective	9.125	6.125	4.875	1.500		
FB-1687	1.687	2-1 Effective	7.500	4.500	3.375	1.500		
FB-1687-3	1.687	2-1 Effective	9.312	6.312	5.061	1.500		
FB-1750	1.750	2-1 Effective	7.750	4.750	3.500	1.500		
FB-1750-3	1.750	2-1 Effective	9.625	6.625	5.250	1.500		

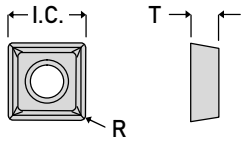

Insert Info

SPEB-432CB	
Grades	K11 K22
I.C.	.500
T	.187
R	.031
Screw	638T
Wrench	T-15

Speed and Feed Info.

Material	S.F.M.	I.P.R.
Mild & Low Carbon Steel *Ex. 1018, 1020, 1117, 1141, 12L14*	800 - 1200	.003 - .005
High Carbon & Alloy Steel *Ex. 1045, 4140, 4340, 52100, 8620*	500 - 800	.003 - .005
Lower Carbon Tool Steel *Ex. P-20, H-13, S-7*	400 - 700	.003 - .005
Tool Steel *Ex. A-2, A-6, D-2, M-2*	300 - 600	.002 - .004
Stainless Steel *Ex. 304, 316, 420, 15-5PH, 17-4PH*	300 - 600	.002 - .004
Iron *Ex. Cast, Ductile, Nodular*	600 - 1000	.003 - .006
Nickel & Titanium Alloy *Ex. Inconel, Hastelloy, TI-6AL-4V*	120 - 180	.002 - .003
Non-Ferrous Metal *Ex. Aluminum, Bronze, Brass*	1000 - 2500	.004 - .008

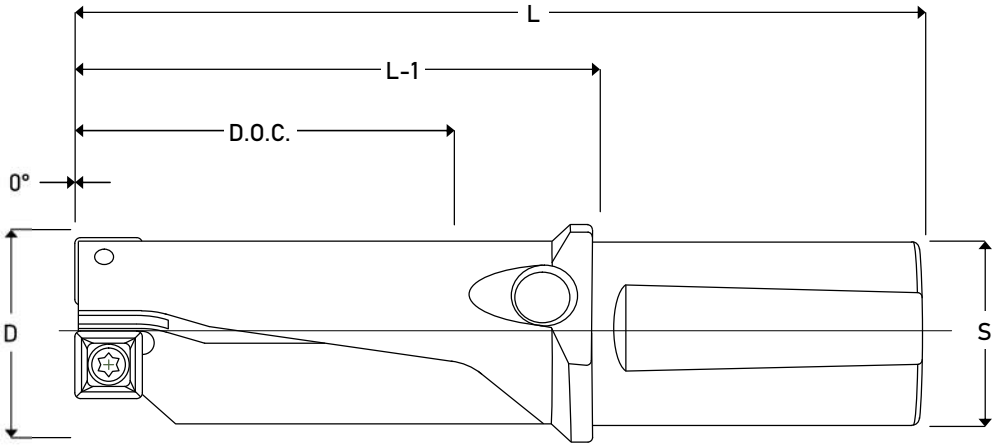

Coolant Thru Standard

Tool Info.

Tool #	D	Flutes	L	L-1	D.O.C.	S	Coolant Plug	Insert
FB-1875	1.875	2-1 Effective	8.000	5.000	3.750	1.500	NPT 1/4	SPEB-532CB
FB-1875-3	1.875	2-1 Effective	9.875	6.875	5.625	1.500	NPT 1/4	SPEB-532CB
FB-2000	2.000	2-1 Effective	8.125	5.125	4.000	1.500	NPT 3/8	SPEB-6352CB
FB-2000-3	2.000	2-1 Effective	10.125	7.125	6.000	1.500	NPT 3/8	SPEB-6352CB
FB-2125	2.125	2-1 Effective	9.125	5.625	4.250	2.000	NPT 3/8	SPEB-6352CB
FB-2125-3	2.125	2-1 Effective	11.750	8.250	6.375	2.000	NPT 3/8	SPEB-6352CB
FB-2250	2.250	2-1 Effective	9.125	5.625	4.500	2.000	NPT 3/8	SPEB-6352CB
FB-2250-3	2.250	2-1 Effective	12.125	8.625	6.750	2.000	NPT 3/8	SPEB-6352CB
FB-2375	2.375	2-1 Effective	9.625	6.125	4.750	2.000	NPT 3/8	SPEB-6352CB
FB-2500	2.500	2-1 Effective	9.625	6.125	5.000	2.000	NPT 3/8	SPEB-6352CB
FB-2500-3	2.500	2-1 Effective	12.875	9.375	7.500	2.000	NPT 3/8	SPEB-6352CB

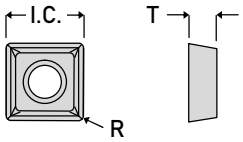

Insert Info

SPEB-532CB	
Grade	K11 K22
I.C.	.625
T	.187
R	.031
Screw	838T
Wrench	T-20

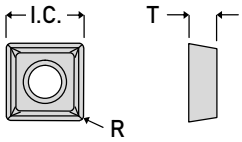

Insert Info

SPEB-6352CB	
Grades	K11 K22
I.C.	.750
T	.220
R	.031
Screw	1012T
Wrench	T-25

Speed and Feed Info.

Material	S.F.M.	I.P.R.
Mild & Low Carbon Steel *Ex. 1018, 1020, 1117, 1141, 12L14*	800 - 1200	.003 - .005
High Carbon & Alloy Steel *Ex. 1045, 4140, 4340, 52100, 8620*	500 - 800	.003 - .005
Lower Carbon Tool Steel *Ex. P-20, H-13, S-7*	400 - 700	.003 - .005
Tool Steel *Ex. A-2, A-6, D-2, M-2*	300 - 600	.002 - .004
Stainless Steel *Ex. 304, 316, 420, 15-5PH, 17-4PH*	300 - 600	.002 - .004
Iron *Ex. Cast, Ductile, Nodular*	600 - 1000	.003 - .006
Nickel & Titanium Alloy *Ex. Inconel, Hastelloy, TI-6AL-4V*	120 - 180	.002 - .003
Non-Ferrous Metal *Ex. Aluminum, Bronze, Brass*	1000 - 2500	.004 - .008

FB

Flat Bottom Drills

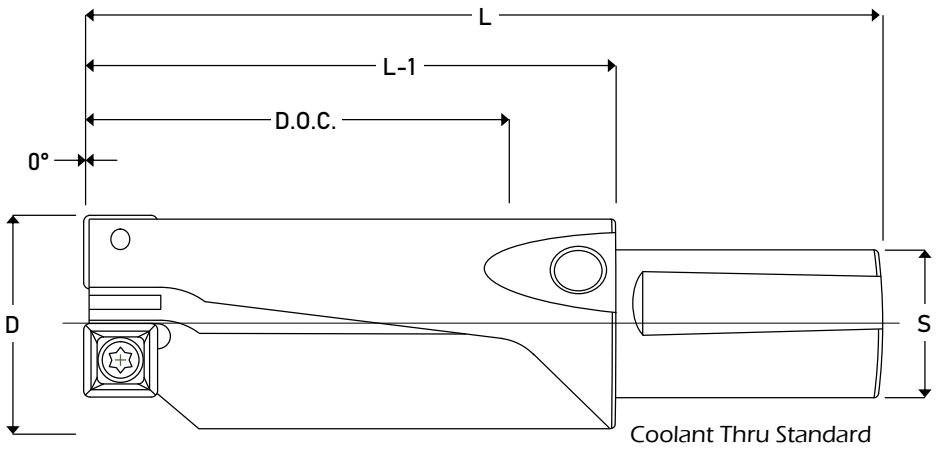

Tool Info.

Tool #	D	Flutes	L	L-1	D.O.C.	S	Coolant Plug	Insert
FB-2750	2.750	2-1 Effective	10.125	6.625	5.500			
FB-3000	3.000	2-1 Effective	10.625	7.125	6.000	2.000	NPT 3/8	SPEB-842CB
FB-3500	3.500	2-1 Effective	11.625	8.125	7.000			

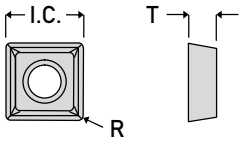

Insert Info

SPEB-842CB	
Grade	K11
I.C.	1.000
T	.250
R	.031
Screw	1412T
Wrench	T-532

Speed and Feed Info.

Material	S.F.M.	I.P.R.
Mild & Low Carbon Steel *Ex. 1018, 1020, 1117, 1141, 12L14*	800 - 1200	.003 - .005
High Carbon & Alloy Steel *Ex. 1045, 4140, 4340, 52100, 8620*	500 - 800	.003 - .005
Lower Carbon Tool Steel *Ex. P-20, H-13, S-7*	400 - 700	.003 - .005
Tool Steel *Ex. A-2, A-6, D-2, M-2*	300 - 600	.002 - .004
Stainless Steel *Ex. 304, 316, 420, 15-5PH, 17-4PH*	300 - 600	.002 - .004
Iron *Ex. Cast, Ductile, Nodular*	600 - 1000	.003 - .006
Nickel & Titanium Alloy *Ex. Inconel, Hastelloy, TI-6AL-4V*	120 - 180	.002 - .003
Non-Ferrous Metal *Ex. Aluminum, Bronze, Brass*	1000 - 2500	.004 - .008

Drill Sergeants

*Straight Flute Shown in Lathe Application

Patented (Patent # 5,259,707)
Coolant Thru w/Rear Coolant Ports
Available in 2:1, 4:1 & 6:1 Ratios
Available in Straight Flute* or Helical Flute
Special Sizes Available Upon Request

K-Tool, Inc.

(Patent # 5,259,707)

DS / DSL

Drill Sergeants

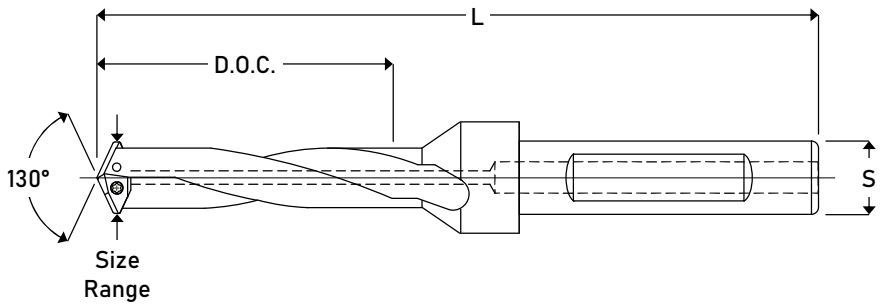

Standard Tap Sizes Highlighted in Red

Helical Flute		*Tool Info.*				
Tool #	Size Range	Standard Inserts	L	D.O.C.	Coolant Plug	S
DS-39-45S	.396 - .450	DI-406 / DI-421 / DI-437	3.812	1.000	NPT 1/8	.500
DS-39-45L	.396 - .450	DI-406 / DI-421 / DI-437	4.812	2.000	N/A	
DS-45-51S	.451 - .510	DI-468 / DI-500	3.812	1.000	NPT 1/8	
DS-45-51L	.451 - .510	DI-468 / DI-500	4.812	2.000	N/A	

Straight Flute		*Tool Info.*				
Tool #	Size Range	Standard Inserts	L	D.O.C.	Coolant Plug	S
DSL-39-45L	.396 - .450	DI-406 / DI-421 / DI-437	4.812	2.000	NPT 1/8	.500
DSL-45-51L	.451 - .510	DI-468 / DI-500				

Use Straight Flute For Lathe and High Pressure Coolant Applications over 500 P.S.I.

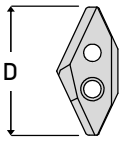

Diameter Tolerance
+/-.002

Insert Info

Insert #	D	Screw	Wrench	Grade
DI-406	.4062	164T	T-6	K11
DI-421	.4219			
DI-437	.4375			
DI-468	.4688			
DI-500	.5000			

Speed and Feed Info.

Material	S.F.M.	I.P.R.
Mild & Low Carbon Steel *Ex. 1018, 1020, 1117, 1141, 12L14*	700 - 900	.003 - .005
High Carbon & Alloy Steel *Ex. 1045, 4140, 4340, 52100, 8620*	500 - 600	.003 - .005
Lower Carbon Tool Steel *Ex. P-20, H-13, S-7*	400 - 500	.003 - .005
Tool Steel *Ex. A-2, A-6, D-2, M-2*	350 - 450	.003 - .005
Stainless Steel *Ex. 304, 316, 420, 15-5PH, 17-4PH*	350 - 550	.003 - .005
Iron *Ex. Cast, Ductile, Nodular*	600 - 800	.004 - .006
Nickel & Titanium Alloy *Ex. Inconel, Hastelloy, TI-6AL-4V*	100 - 200	.001 - .003
Non-Ferrous Metal *Ex. Aluminum, Bronze, Brass*	1000 - 2000	.004 - .006

(Patent # 5,259,707)

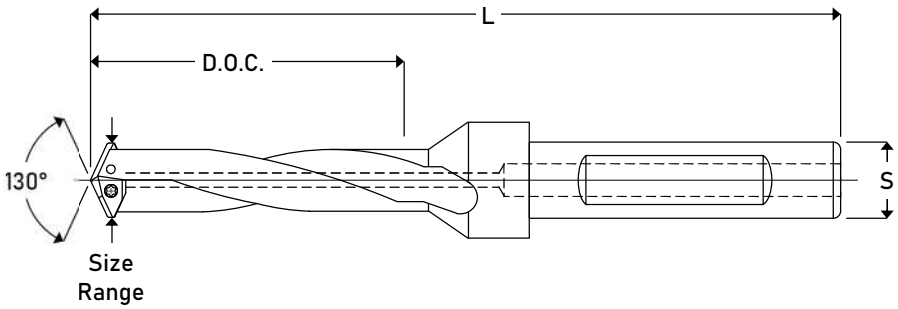

Standard Tap Sizes Highlighted in Red

Helical Flute — Tool Info.

Tool #	Size Range	Standard Inserts	L	D.O.C.	Coolant Plug	S
DS-51-57S	.511 - .570	DI-515 / DI-531 / DI-562	5.000	1.500	NPT 1/8	.750
DS-51-57L	.511 - .570	DI-515 / DI-531 / DI-562	6.500	3.000	N/A	
DS-57-63S	.571 - .630	DI-578 / DI-593 / DI-625	5.000	1.500	NPT 1/8	
DS-57-63L	.571 - .630	DI-578 / DI-593 / DI-625	6.500	3.000	N/A	
DS-63-69S	.631 - .695	DI-640 / DI-656 / DI-669 / DI-687	5.000	1.500	NPT 1/8	
DS-63-69L	.631 - .695	DI-640 / DI-656 / DI-669 / DI-687	6.500	3.000	N/A	

Straight Flute — Tool Info.

Tool #	Size Range	Standard Inserts	L	D.O.C.	Coolant Plug	S
DSL-51-57L	.511 - .570	DI-515 / DI-531 / DI-562	6.500	3.000	NPT 1/8	.750
DSL-57-63L	.571 - .630	DI-578 / DI-593 / DI-625				
DSL-63-69L	.631 - .695	DI-640 / DI-656 / DI-669 / DI-687				

Use Straight Flute For Lathe and High Pressure Coolant Applications over 500 P.S.I.

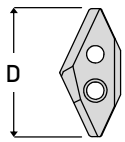

Diameter Tolerance
+/-.002

Insert Info

Insert #	D	Screw	Wrench	Grade
DI-515	.5156	314T	T-8	K11
DI-531	.5312			
DI-562	.5625			
DI-578	.5781			
DI-593	.5938			
DI-625	.6250			
DI-640	.6400			
DI-656	.6562			
DI-669	.6693			
DI-687	.6875			

Speed and Feed Info.

Material	S.F.M.	I.P.R.
Mild & Low Carbon Steel *Ex. 1018, 1020, 1117, 1141, 12L14*	700 - 900	.004 - .006
High Carbon & Alloy Steel *Ex. 1045, 4140, 4340, 52100, 8620*	500 - 600	.004 - .006
Lower Carbon Tool Steel *Ex. P-20, H-13, S-7*	400 - 500	.004 - .006
Tool Steel *Ex. A-2, A-6, D-2, M-2*	350 - 450	.004 - .006
Stainless Steel *Ex. 304, 316, 420, 15-5PH, 17-4PH*	350 - 550	.004 - .006
Iron *Ex. Cast, Ductile, Nodular*	600 - 800	.005 - .008
Nickel & Titanium Alloy *Ex. Inconel, Hastelloy, TI-6AL-4V*	100 - 200	.001 - .003
Non-Ferrous Metal *Ex. Aluminum, Bronze, Brass*	1000 - 2000	.005 - .008

K-Tool, Inc.

(Patent # 5,259,707)

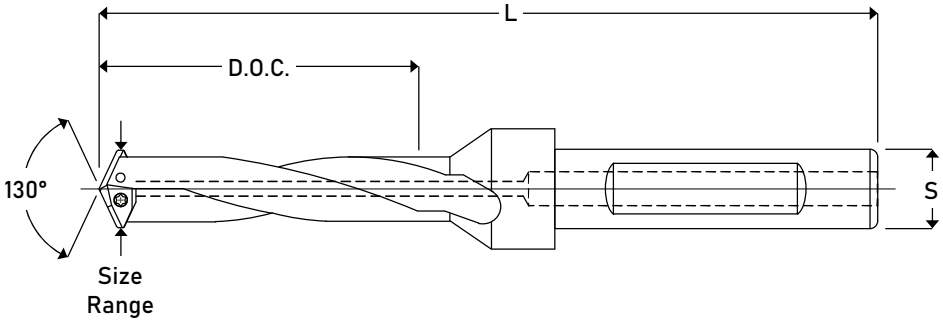

Helical Flute		*Tool Info.*				
Tool #	Size Range	Standard Inserts	L	D.O.C.	Coolant Plug	S
DS-69-76S	.696 - .760	DI-718 / DI-750	5.000	1.500	NPT 1/8	.750
DS-69-76L	.696 - .760	DI-718 / DI-750	6.500	3.000	N/A	
DS-69-76XL	.696 - .760	DI-718 / DI-750	8.000	4.500	N/A	

Straight Flute		*Tool Info.*				
Tool #	Size Range	Standard Inserts	L	D.O.C.	Coolant Plug	S
DSL-69-76L	.696 - .760	DI-718 / DI-750	6.500	3.000	NPT 1/8	.750
DSL-69-76XL	.696 - .760	DI-718 / DI-750	8.000	4.500		

Use Straight Flute For Lathe and High Pressure Coolant Applications over 500 P.S.I.

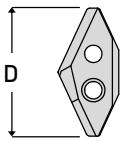

Diameter Tolerance
+/-.002

Insert Info				
Insert #	D	Screw	Wrench	Grade
DI-718	.7188	314T	T-8	K11
DI-750	.7500			

Speed and Feed Info.		
Material	S.F.M.	I.P.R.
Mild & Low Carbon Steel *Ex. 1018, 1020, 1117, 1141, 12L14*	700 - 900	.004 - .006
High Carbon & Alloy Steel *Ex. 1045, 4140, 4340, 52100, 8620*	500 - 600	.004 - .006
Lower Carbon Tool Steel *Ex. P-20, H-13, S-7*	400 - 500	.004 - .006
Tool Steel *Ex. A-2, A-6, D-2, M-2*	350 - 450	.004 - .006
Stainless Steel *Ex. 304, 316, 420, 15-5PH, 17-4PH*	350 - 550	.004 - .006
Iron *Ex. Cast, Ductile, Nodular*	600 - 800	.005 - .008
Nickel & Titanium Alloy *Ex. Inconel, Hastelloy, TI-6AL-4V*	100 - 200	.001 - .003
Non-Ferrous Metal *Ex. Aluminum, Bronze, Brass*	1000 - 2000	.005 - .008

(Patent # 5,259,707)

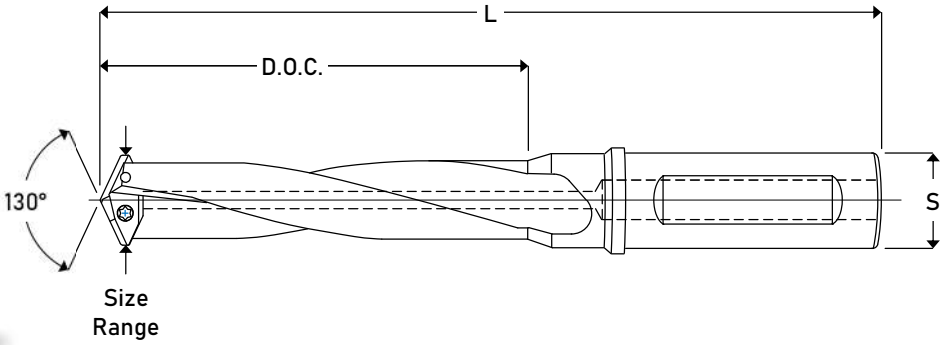

Standard Tap Sizes Highlighted in Red

Helical Flute — *Tool Info.*

Tool #	Size Range	Standard Inserts	L	D.O.C.	Coolant Plug	S
DS-76-84S	.761 - .840	DI-765 / DI-781 / DI-812	5.950	2.000	NPT 1/8	1.000
DS-76-84L	.761 - .840	DI-765 / DI-781 / DI-812	7.950	4.000	N/A	
DS-76-84XL	.761 - .840	DI-765 / DI-781 / DI-812	9.950	6.000	N/A	
DS-84-92S	.841 - .925	DI-843 / DI-875 / DI-906 / DI-921	5.950	2.000	NPT 1/8	
DS-84-92L	.841 - .925	DI-843 / DI-875 / DI-906 / DI-921	7.950	4.000	N/A	
DS-84-92XL	.841 - .925	DI-843 / DI-875 / DI-906 / DI-921	9.950	6.000	N/A	

Straight Flute — *Tool Info.*

Tool #	Size Range	Standard Inserts	L	D.O.C.	Coolant Plug	S
DSL-76-84L	.761 - .840	DI-765 / DI-781 / DI-812	7.950	4.000	NPT 1/8	1.000
DSL-76-84XL	.761 - .840	DI-765 / DI-781 / DI-812	9.950	6.000		
DSL-84-92L	.841 - .925	DI-843 / DI-875 / DI-906 / DI-921	7.950	4.000		
DSL-84-92XL	.841 - .925	DI-843 / DI-875 / DI-906 / DI-921	9.950	6.000		

Use Straight Flute For Lathe and High Pressure Coolant Applications over 500 P.S.I.

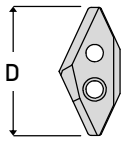

Diameter Tolerance
+/-.002

Insert Info

Insert #	D	Screw	Wrench	Grade
DI-765	.7656	560T	T-10	K11
DI-781	.7812			
DI-812	.8125			
DI-843	.8438			
DI-875	.8750			
DI-906	.9062			
DI-921	.9219			

Speed and Feed Info.

Material	S.F.M.	I.P.R.
Mild & Low Carbon Steel *Ex. 1018, 1020, 1117, 1141, 12L14*	700 - 900	.005 - .008
High Carbon & Alloy Steel *Ex. 1045, 4140, 4340, 52100, 8620*	500 - 600	.005 - .008
Lower Carbon Tool Steel *Ex. P-20, H-13, S-7*	400 - 500	.005 - .008
Tool Steel *Ex. A-2, A-6, D-2, M-2*	350 - 450	.005 - .008
Stainless Steel *Ex. 304, 316, 420, 15-5PH, 17-4PH*	350 - 550	.005 - .008
Iron *Ex. Cast, Ductile, Nodular*	600 - 800	.006 - .012
Nickel & Titanium Alloy *Ex. Inconel, Hastelloy, TI-6AL-4V*	100 - 200	.002 - .004
Non-Ferrous Metal *Ex. Aluminum, Bronze, Brass*	1000 - 2000	.006 - .012

K-Tool, Inc.

(Patent # 5,259,707)

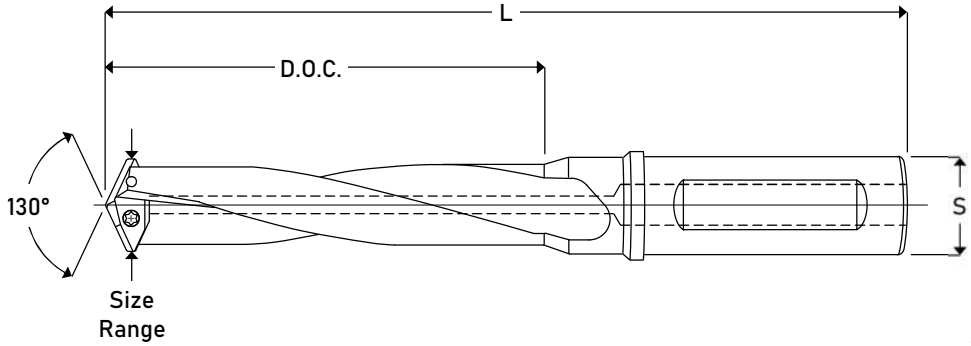

Standard Tap Sizes Highlighted in Red

Helical Flute — *Tool Info.*

Tool #	Size Range	Standard Inserts	L	D.O.C.	Coolant Plug	S
DS-92-101S	.926 - 1.010	DI-937 / DI-968 / DI-984 / DI-1000	5.950	2.000	NPT 1/8	1.000
DS-92-101L	.926 - 1.010	DI-937 / DI-968 / DI-984 / DI-1000	7.950	4.000	N/A	
DS-92-101XL	.926 - 1.010	DI-937 / DI-968 / DI-984 / DI-1000	9.950	6.000	N/A	

Straight Flute — *Tool Info.*

Tool #	Size Range	Standard Inserts	L	D.O.C.	Coolant Plug	S
DSL-92-101L	.926 - 1.010	DI-937 / DI-968 / DI-984 / DI-1000	7.950	4.000	NPT 1/8	1.000
DSL-92-101XL	.926 - 1.010	DI-937 / DI-968 / DI-984 / DI-1000	9.950	6.000		

Use Straight Flute For Lathe and High Pressure Coolant Applications over 500 P.S.I.

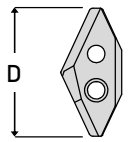

Diameter Tolerance
+/-.002

Insert Info

Insert #	D	Screw	Wrench	Grade
DI-937	.9375	560T	T-10	K11
DI-968	.9688			
DI-984	.9840			
DI-1000	1.000			

Speed and Feed Info.

Material	S.F.M.	I.P.R.
Mild & Low Carbon Steel *Ex. 1018, 1020, 1117, 1141, 12L14*	700 - 900	.005 - .008
High Carbon & Alloy Steel *Ex. 1045, 4140, 4340, 52100, 8620*	500 - 600	.005 - .008
Lower Carbon Tool Steel *Ex. P-20, H-13, S-7*	400 - 500	.005 - .008
Tool Steel *Ex. A-2, A-6, D-2, M-2*	350 - 450	.005 - .008
Stainless Steel *Ex. 304, 316, 420, 15-5PH, 17-4PH*	350 - 550	.005 - .008
Iron *Ex. Cast, Ductile, Nodular*	600 - 800	.006 - .012
Nickel & Titanium Alloy *Ex. Inconel, Hastelloy, TI-6AL-4V*	100 - 200	.002 - .004
Non-Ferrous Metal *Ex. Aluminum, Bronze, Brass*	1000 - 2000	.006 - .012

(Patent # 5,259,707)

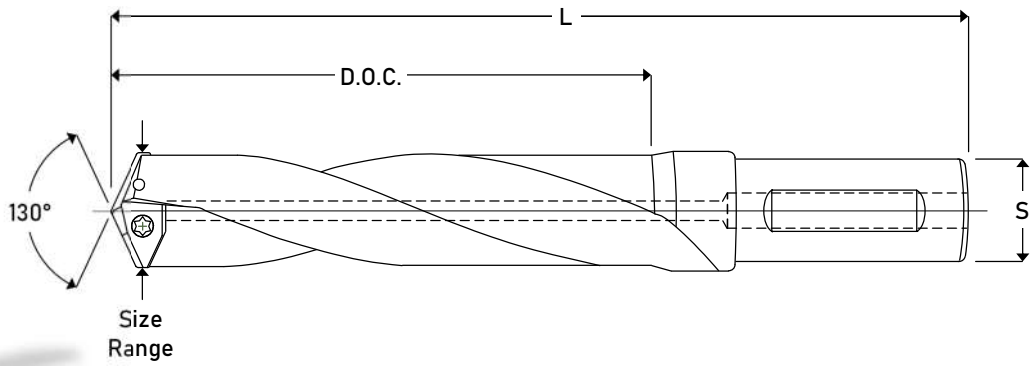

Standard Tap Sizes Highlighted in Red

Helical Flute — Tool Info.

Tool #	Size Range	Standard Inserts	L	D.O.C.	Coolant Plug	S
DS-101-113S	1.011 - 1.135	DI-1031 / DI-1062 / DI-1093 / DI-1125	6.500	2.500	NPT 1/4	1.000
DS-101-113L	1.011 - 1.135	DI-1031 / DI-1062 / DI-1093 / DI-1125	9.000	5.000	N/A	
DS-101-113XL	1.011 - 1.135	DI-1031 / DI-1062 / DI-1093 / DI-1125	11.500	7.500	N/A	
DS-113-126S	1.136 - 1.260	DI-1156 / DI-1187 / DI-1218 / DI-1250	6.500	2.500	NPT 1/4	
DS-113-126L	1.136 - 1.260	DI-1156 / DI-1187 / DI-1218 / DI-1250	9.000	5.000	N/A	
DS-113-126XL	1.136 - 1.260	DI-1156 / DI-1187 / DI-1218 / DI-1250	11.500	7.500	N/A	

Straight Flute — Tool Info.

Tool #	Size Range	Standard Inserts	L	D.O.C.	Coolant Plug	S
DSL-101-113L	1.011 - 1.135	DI-1031 / DI-1062 / DI-1093 / DI-1125	9.000	5.000	NPT 1/4	1.000
DSL-101-113XL	1.011 - 1.135	DI-1031 / DI-1062 / DI-1093 / DI-1125	11.500	7.500		
DSL-113-126L	1.136 - 1.260	DI-1156 / DI-1187 / DI-1218 / DI-1250	9.000	5.000		
DSL-113-126XL	1.136 - 1.260	DI-1156 / DI-1187 / DI-1218 / DI-1250	11.500	7.500		

Use Straight Flute For Lathe and High Pressure Coolant Applications over 500 P.S.I.

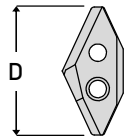

Diameter Tolerance
+/-.002

Insert Info

Insert #	D	Screw	Wrench	Grade
DI-1031	1.0312	638T	T-15	K11
DI-1062	1.0625			
DI-1093	1.0938			
DI-1125	1.1250			
DI-1156	1.1562			
DI-1187	1.1875			
DI-1218	1.2188			
DI-1250	1.2500			

Speed and Feed Info.

Material	S.F.M.	I.P.R.
Mild & Low Carbon Steel *Ex. 1018, 1020, 1117, 1141, 12L14*	700 - 900	.006 - .010
High Carbon & Alloy Steel *Ex. 1045, 4140, 4340, 52100, 8620*	500 - 600	.006 - .010
Lower Carbon Tool Steel *Ex. P-20, H-13, S-7*	400 - 500	.006 - .010
Tool Steel *Ex. A-2, A-6, D-2, M-2*	350 - 450	.006 - .010
Stainless Steel *Ex. 304, 316, 420, 15-5PH, 17-4PH*	350 - 550	.005 - .008
Iron *Ex. Cast, Ductile, Nodular*	600 - 800	.008 - .014
Nickel & Titanium Alloy *Ex. Inconel, Hastelloy, TI-6AL-4V*	100 - 200	.003 - .005
Non-Ferrous Metal *Ex. Aluminum, Bronze, Brass*	1000 - 2000	.008 - .014

K-Tool, Inc.

(Patent # 5,259,707)

DS / DSL

Drill Sergeants

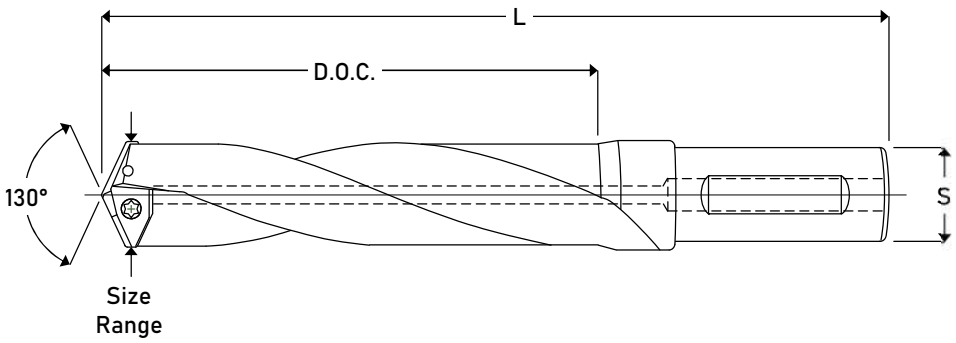

Standard Tap Sizes Highlighted in Red

Helical Flute — *Tool Info.*

Tool #	Size Range	Standard Inserts	L	D.O.C.	Coolant Plug	S
DS-126-138S	1.261 - 1.385	DI-1281 / DI-1312 / DI-1343 / DI-1375	7.250	3.000	NPT 1/4	1.250
DS-126-138L	1.261 - 1.385	DI-1281 / DI-1312 / DI-1343 / DI-1375	10.250	6.000	N/A	
DS-126-138XL	1.261 - 1.385	DI-1281 / DI-1312 / DI-1343 / DI-1375	13.250	9.000	N/A	
DS-138-151S	1.386 - 1.510	DI-1406 / DI-1437 / DI-1468 / DI-1500	7.250	3.000	NPT 1/4	
DS-138-151L	1.386 - 1.510	DI-1406 / DI-1437 / DI-1468 / DI-1500	10.250	6.000	N/A	
DS-138-151XL	1.386 - 1.510	DI-1406 / DI-1437 / DI-1468 / DI-1500	13.250	9.000	N/A	

Straight Flute — *Tool Info.*

Tool #	Size Range	Standard Inserts	L	D.O.C.	Coolant Plug	S
DSL-126-138L	1.261 - 1.385	DI-1281 / DI-1312 / DI-1343 / DI-1375	10.250	6.000	NPT 1/4	1.250
DSL-126-138XL	1.261 - 1.385	DI-1281 / DI-1312 / DI-1343 / DI-1375	13.250	9.000		
DSL-138-151L	1.386 - 1.510	DI-1406 / DI-1437 / DI-1468 / DI-1500	10.250	6.000		
DSL-138-151XL	1.386 - 1.510	DI-1406 / DI-1437 / DI-1468 / DI-1500	13.250	9.000		

Use Straight Flute For Lathe and High Pressure Coolant Applications over 500 P.S.I.

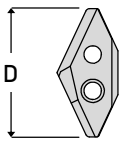

Diameter Tolerance
+/-.002

Insert Info

Insert #	D	Screw	Wrench	Grade
DI-1281	1.2812	638T	T-15	K11
DI-1312	1.3125			
DI-1343	1.3438			
DI-1375	1.3750			
DI-1406	1.4062			
DI-1437	1.4375			
DI-1468	1.4688			
DI-1500	1.5000			

Speed and Feed Info.

Material	S.F.M.	I.P.R.
Mild & Low Carbon Steel *Ex. 1018, 1020, 1117, 1141, 12L14*	700 - 900	.006 - .010
High Carbon & Alloy Steel *Ex. 1045, 4140, 4340, 52100, 8620*	500 - 600	.006 - .010
Lower Carbon Tool Steel *Ex. P-20, H-13, S-7*	400 - 500	.006 - .010
Tool Steel *Ex. A-2, A-6, D-2, M-2*	350 - 450	.006 - .010
Stainless Steel *Ex. 304, 316, 420, 15-5PH, 17-4PH*	350 - 550	.005 - .008
Iron *Ex. Cast, Ductile, Nodular*	600 - 800	.008 - .014
Nickel & Titanium Alloy *Ex. Inconel, Hastelloy, TI-6AL-4V*	100 - 200	.003 - .005
Non-Ferrous Metal *Ex. Aluminum, Bronze, Brass*	1000 - 2000	.008 - .014

Drill Mills

Drills from Solid
Cuts a Flat Bottom Within .001
Boring Capabilities - Modifications Available
Chipbreaker Inserts for Drilling
Positive Top Inserts for Milling

K-Tool, Inc.

1 Effective Center Cutting Endmills

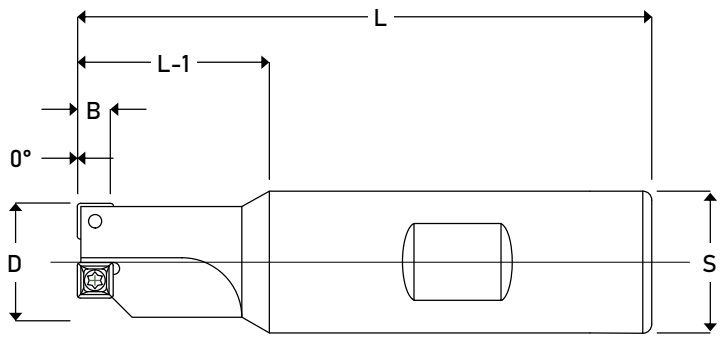

* Single Insert Tool Design

Tool Info.

Tool #	D	Inserts	L	L-1	B	S	Positive Top Inserts	Chipbreaker Inserts	Screw	Wrench
DM-375*	.375	1	2.500	.625	.170	.500	N/A	SDEB-1511CB	164T	T-6
DM-500*	.500	1	2.625	.625	.235	.500	SDEB-2151P	SDEB-2151CB	300T	T-8
DM-502	.500	2	2.625	.875	.170	.500	N/A	SPEB-1511CB	164T	T-6
DM-531	.531	2	2.625	.875	.170	.500	N/A	SPEB-1511CB	164T	T-6
DM-562	.562	2	3.000	1.000	.170	.750	N/A	SPEB-1511CB	164T	T-6
DM-593	.593	2	3.000	1.000	.170	.750	N/A	SPEB-1511CB	164T	T-6
DM-625*	.625	1	3.000	1.000	.280	.750	SDEB-2522P	SDEB-2522CB	300T	T-8
DM-6252	.625	2	3.000	1.000	.170	.750	N/A	SPEB-1511CB	164T	T-6
DM-656	.656	2	3.000	.940	.170	.750	N/A	SPEB-1511CB	164T	T-6

Chipbreaker Inserts

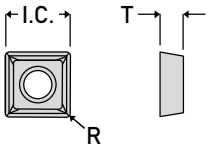

Insert Info.

Insert #	I.C.	T	R	Grades	
SDEB-1511CB	.187	.082	.015	K11	K22
SPEB-1511CB	.187	.082	.015	K11	K22
SDEB-2151CB	.250	.093	.015	K11	K22
SDEB-2522CB	.312	.125	.031	K11	K22

Positive Top Inserts

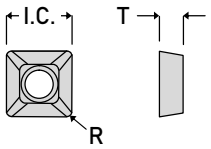

Insert Info.

Insert #	I.C.	T	R	Grade
SDEB-2151P	.250	.093	.015	X33
SDEB-2522P	.312	.125	.031	X33

IMPORTANT

Use Chipbreaker Inserts for Drilling & C-Boring.
Use Positive Top Inserts for Ramping or Pocket Milling.

Speed and Feed Info.

Material	S.F.M.	Drilling I.P.R.	Milling I.P.R.
Mild & Low Carbon Steel *Ex. 1018, 1020, 1117, 1141, 12L14*	800 - 1200	.001 - .003	.002 - .003
High Carbon & Alloy Steel *Ex. 1045, 4140, 4340, 52100, 8620*	500 - 800	.001 - .003	.002 - .003
Lower Carbon Tool Steel *Ex. P-20, H-13, S-7*	400 - 700	.001 - .003	.002 - .003
Tool Steel *Ex. A-2, A-6, D-2, M-2*	300 - 600	.001 - .003	.002 - .003
Stainless Steel *Ex. 304, 316, 420, 15-5PH, 17-4PH*	300 - 600	.001 - .003	.002 - .003
Iron *Ex. Cast, Ductile, Nodular*	600 - 1000	.002 - .003	.002 - .003
Nickel & Titanium Alloy *Ex. Inconel, Hastelloy, TI-6AL-4V*	120 - 180	.001 - .0015	.001 - .002
Non-Ferrous Metal *Ex. Aluminum, Bronze, Brass*	1000 - 2500	.002 - .003	.002 - .003

1 Effective Center Cutting Endmills

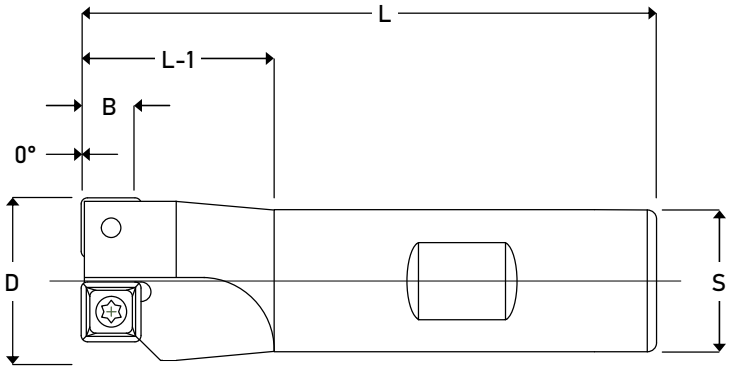

* Single Insert Tool Design

Tool Info.

Tool #	D	Inserts	L	L-1	B	S	Positive Top Insert	Chipbreaker Insert	Screw	Wrench
DM-687	.687	2	3.000	.970	.235	.750	SPEB-221P	SPEB-221CB	314T	T-8
DM-718	.718	2	3.000	1.000	.235	.750	SPEB-221P	SPEB-221CB	314T	T-8
DM-750*	.750	1	3.000	1.000	.340	.750	SPEB-322P	SPEB-322CB	414T	T-10
XDM-750*	.750	1	4.250	1.500	.340	.750	SPEB-322P	SPEB-322CB	414T	T-10
DM-752	.750	2	3.000	1.000	.235	.750	SPEB-221P	SPEB-221CB	314T	T-8
XDM-752	.750	2	4.250	1.500	.235	.750	SPEB-221P	SPEB-221CB	314T	T-8
DM-781	.781	2	3.000	1.000	.235	.750	SPEB-221P	SPEB-221CB	314T	T-8
DM-812	.812	2	3.000	1.000	.280	.750	SPEB-2522P	SPEB-2522CB	314T	T-8
DM-875	.875	2	3.000	1.000	.280	.750	SPEB-2522P	SPEB-2522CB	314T	T-8
DM-937	.937	2	3.250	1.250	.280	.750	SPEB-2522P	SPEB-2522CB	314T	T-8

Chipbreaker Inserts

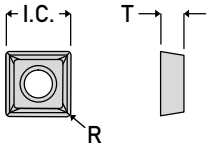

IMPORTANT
Use Chipbreaker Inserts for Drilling & C-Boring.
Use Positive Top Inserts for Ramping or Pocket Milling.

Insert Info.

Insert #	I.C.	T	R	Grades
SPEB-221CB	.250	.125	.015	K11 K22
SPEB-2522CB	.312	.125	.031	K11 K22
SPEB-322CB	.375	.125	.031	K11 K22

Positive Top Inserts

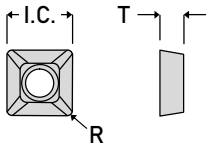

Insert Info.

Insert #	I.C.	T	R	Grades
SPEB-221P	.250	.125	.015	K11
SPEB-2522P	.312	.125	.031	B1M D66 K11 K22
SPEB-322P	.375	.125	.031	B1M D66 K11 K22

Speed and Feed Info.

Material	S.F.M.	Drilling I.P.R.	Milling I.P.R.
Mild & Low Carbon Steel Ex. 1018, 1020, 1117, 1141, 12L14	800 - 1200	.002 - .004	.002 - .004
High Carbon & Alloy Steel Ex. 1045, 4140, 4340, 52100, 8620	500 - 800	.002 - .003	.002 - .004
Lower Carbon Tool Steel Ex. P-20, H-13, S-7	400 - 700	.002 - .003	.002 - .004
Tool Steel Ex. A-2, A-6, D-2, M-2	300 - 600	.001 - .003	.002 - .004
Stainless Steel Ex. 304, 316, 420, 15-5PH, 17-4PH	300 - 600	.001 - .003	.002 - .004
Iron Ex. Cast, Ductile, Nodular	600 - 1000	.002 - .005	.002 - .005
Nickel & Titanium Alloy Ex. Inconel, Hastelloy, TI-6AL-4V	120 - 180	.001 - .002	.001 - .002
Non-Ferrous Metal Ex. Aluminum, Bronze, Brass	1000 - 2500	.003 - .006	.002 - .004

K-Tool, Inc.

1 Effective Center Cutting Endmills

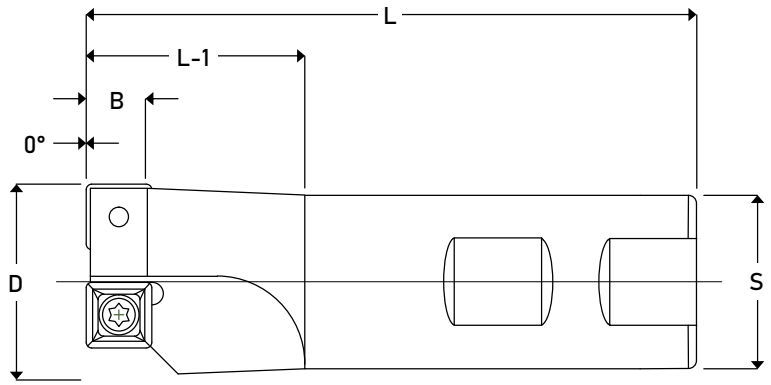

Tool Info.

Tool #	D	Inserts	L	L-1	B	S	Positive Top Insert	Chipbreaker Insert	Screw	Wrench
DM-1000	1.000	2	3.250	1.250	.340	.750	SPEB-322P	SPEB-322CB	414T	T-10
XDM-1000	1.000	2	5.250	2.000	.340	1.000	SPEB-322P	SPEB-322CB	414T	T-10
DM-1125	1.125	2	3.500	1.250	.340	1.000	SPEB-322P	SPEB-322CB	438T	T-10
DM-1250	1.250	2	3.625	1.375	.340	1.000	SPEB-322P	SPEB-322CB	438T	T-10
XDM-1250	1.250	2	5.250	1.375	.340	1.000	SPEB-322P	SPEB-322CB	438T	T-10

Chipbreaker Insert

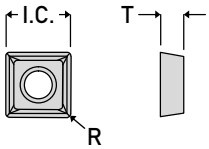

Insert Info.

Insert #	I.C.	T	R	Grades
SPEB-322CB	.375	.125	.031	K11 K22

Positive Top Insert

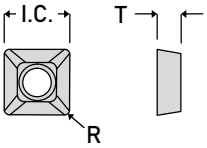

Insert Info.

Insert #	I.C.	T	R	Grades
SPEB-322P	.375	.125	.031	B1M D66 K11 K22

IMPORTANT

Use Chipbreaker Inserts for Drilling & C-Boring.
Use Positive Top Inserts for Ramping or Pocket Milling.

Speed and Feed Info.

Material	S.F.M.	Drilling I.P.R.	Milling I.P.R.
Mild & Low Carbon Steel *Ex. 1018, 1020, 1117, 1141, 12L14*	800 - 1200	.002 - .004	.002 - .005
High Carbon & Alloy Steel *Ex. 1045, 4140, 4340, 52100, 8620*	500 - 800	.002 - .004	.002 - .005
Lower Carbon Tool Steel *Ex. P-20, H-13, S-7*	400 - 700	.002 - .004	.002 - .005
Tool Steel *Ex. A-2, A-6, D-2, M-2*	300 - 600	.002 - .003	.002 - .004
Stainless Steel *Ex. 304, 316, 420, 15-5PH, 17-4PH*	300 - 600	.002 - .003	.002 - .004
Iron *Ex. Cast, Ductile, Nodular*	600 - 1000	.002 - .004	.002 - .006
Nickel & Titanium Alloy *Ex. Inconel, Hastelloy, TI-6AL-4V*	120 - 180	.001 - .002	.001 - .002
Non-Ferrous Metal *Ex. Aluminum, Bronze, Brass*	1000 - 2500	.002 - .004	.003 - .006

1 Effective Center Cutting Endmills

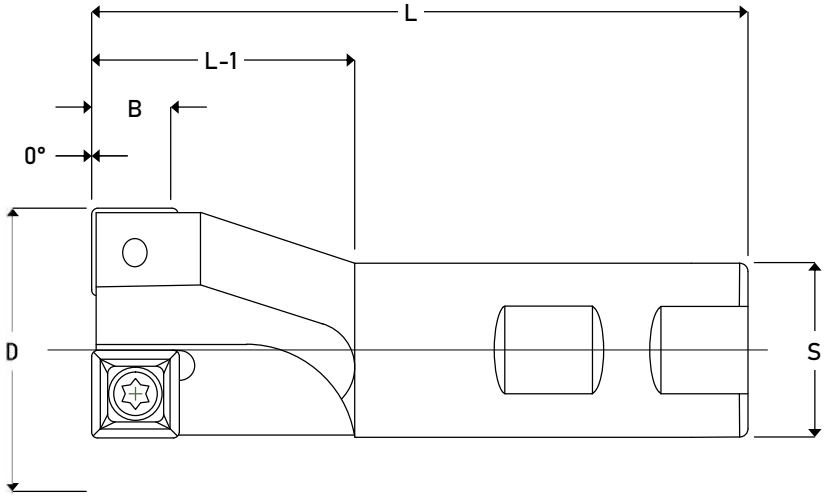

Tool Info.

Tool #	D	Inserts	L	L-1	B	S	Positive Top Insert	Chipbreaker Insert	Screw	Wrench
DM-1375	1.375	2	3.625	1.375	.465	1.000				
DM-1500	1.500	2	3.625	1.375	.465	1.000				
XDM-1500	1.500	2	5.250	1.375	.465	1.000	SPEB-432PA	SPEB-432CB	638T	T-15
DM-1625	1.625	2	3.750	1.500	.465	1.000				
DM-1750	1.750	2	3.750	1.500	.465	1.000				
DM-1875	1.875	2	3.875	1.625	.585	1.000	SPEB-532PA	SPEB-532CB	838T	T-20

Chipbreaker Insert

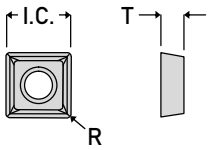

Insert Info.

Insert #	I.C.	T	R	Grades
SPEB-432CB	.500	.187	.031	K11 K22
SPEB-532CB	.625	.187	.031	K11 K22

Positive Top Insert

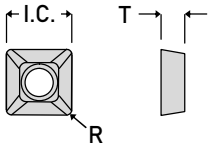

Insert Info.

Insert #	I.C.	T	R	Grades
SPEB-432PA	.500	.187	.031	B1M D66 K11 K22
SPEB-532PA	.625	.187	.031	D66 K11 K22

IMPORTANT
Use Chipbreaker Inserts for Drilling & C-Boring.
Use Positive Top Inserts for Ramping or Pocket Milling.

Speed and Feed Info.

Material	S.F.M.	Drilling I.P.R.	Milling I.P.R.
Mild & Low Carbon Steel *Ex. 1018, 1020, 1117, 1141, 12L14*	800 - 1200	.003 - .005	.002 - .005
High Carbon & Alloy Steel *Ex. 1045, 4140, 4340, 52100, 8620*	500 - 800	.003 - .005	.002 - .005
Lower Carbon Tool Steel *Ex. P-20, H-13, S-7*	400 - 700	.003 - .005	.002 - .005
Tool Steel *Ex. A-2, A-6, D-2, M-2*	300 - 600	.002 - .004	.002 - .004
Stainless Steel *Ex. 304, 316, 420, 15-5PH, 17-4PH*	300 - 600	.002 - .004	.002 - .004
Iron *Ex. Cast, Ductile, Nodular*	600 - 1000	.003 - .006	.002 - .006
Nickel & Titanium Alloy *Ex. Inconel, Hastelloy, TI-6AL-4V*	120 - 180	.002 - .003	.001 - .002
Non-Ferrous Metal *Ex. Aluminum, Bronze, Brass*	1000 - 2500	.004 - .008	.003 - .006

1 Effective Center Cutting Endmills

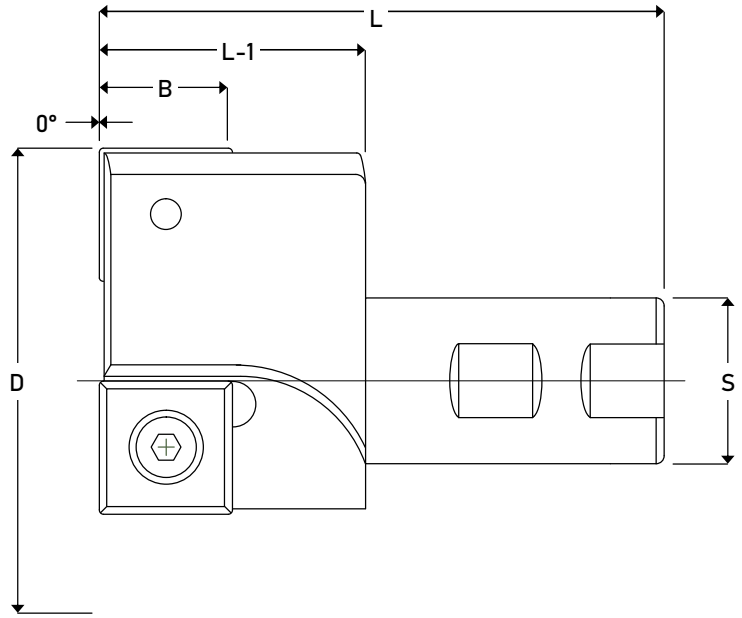

Tool Info.

Tool #	D	Inserts	L	L-1	B	S	Positive Top Insert	Chipbreaker Insert	Screw	Wrench
DM-2001	2.000	2	4.000	1.750	.710	1.000	SPEB-6352PA	SPEB-6352CB	1012T	T-25
XDM-2000	2.000	2	5.500	1.500	.710	1.250	SPEB-6352PA	SPEB-6352CB	1012T	T-25
DM-2125	2.125	2	4.000	1.750	.710	1.000	SPEB-6352PA	SPEB-6352CB	1012T	T-25
DM-2250	2.250	2	4.000	1.750	.710	1.000	SPEB-6352PA	SPEB-6352CB	1012T	T-25
DM-2500	2.500	2	4.000	1.750	.710	1.000	SPEB-6352PA	SPEB-6352CB	1012T	T-25
DM-3000	3.000	2	4.250	2.000	.960	1.250	SPEB-842PA	SPEB-842CB	1412T	T-532
DM-3250	3.250	2	4.250	2.000	.960	1.250	SPEB-842PA	SPEB-842CB	1412T	T-532
DM-3500	3.500	2	4.250	2.000	.960	1.250	SPEB-842PA	SPEB-842CB	1412T	T-532

Chipbreaker Inserts

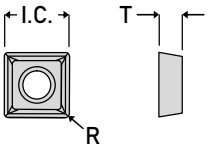

Insert Info.

Insert #	I.C.	T	R	Grades
SPEB-6352CB	.750	.220	.031	K11 K22
SPEB-842CB	1.000	.250	.031	K11

Positive Top Inserts

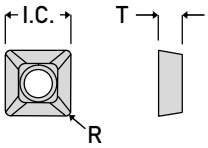

Insert Info.

Insert #	I.C.	T	R	Grades
SPEB-6352PA	.750	.220	.031	D66 K11 K22
SPEB-842PA	1.000	.250	.031	K11

IMPORTANT

Use Chipbreaker Inserts for Drilling & C-Boring.
Use Positive Top Inserts for Ramping or Pocket Milling.

Speed and Feed Info.

Material	S.F.M.	Drilling I.P.R.	Milling I.P.R.
Mild & Low Carbon Steel *Ex. 1018, 1020, 1117, 1141, 12L14*	800 - 1200	.003 - .005	.002 - .005
High Carbon & Alloy Steel *Ex. 1045, 4140, 4340, 52100, 8620*	500 - 800	.003 - .005	.002 - .005
Lower Carbon Tool Steel *Ex. P-20, H-13, S-7*	400 - 700	.003 - .005	.002 - .005
Tool Steel *Ex. A-2, A-6, D-2, M-2*	300 - 600	.002 - .004	.002 - .004
Stainless Steel *Ex. 304, 316, 420, 15-5PH, 17-4PH*	300 - 600	.002 - .004	.002 - .004
Iron *Ex. Cast, Ductile, Nodular*	600 - 1000	.003 - .006	.002 - .006
Nickel & Titanium Alloy *Ex. Inconel, Hastelloy, TI-6AL-4V*	120 - 180	.002 - .003	.001 - .002
Non-Ferrous Metal *Ex. Aluminum, Bronze, Brass*	1000 - 2500	.004 - .008	.003 - .006

Drill Mill Twins

Drills from Solid
Cuts a Flat Bottom Within .001
2 Effective When Milling & Counterboring
Modifications Available
Chipbreaker Inserts for Drilling
Positive Top Inserts for Milling

K-Tool, Inc.

2 Effective Center Cutting Endmills

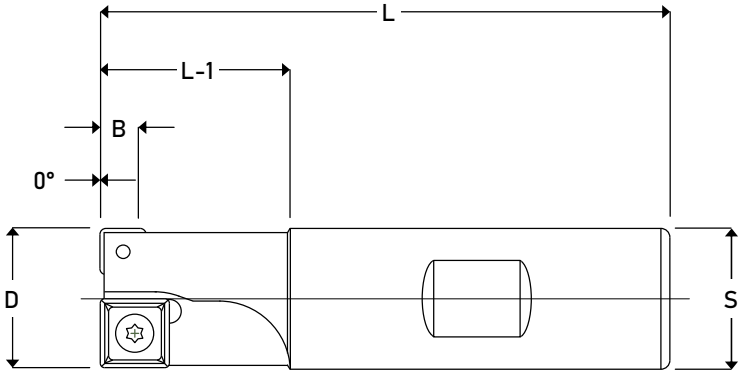

Tool Info.

Tool #	D	L	L-1	B	S	Inserts	Screw	Wrench
DMT-500	.500	2.625	.625	.170	.500	(1) SDEB-1511CB (1) SDEB-2151CB	164T 300T	T-6 T-8
XDMT-500	.500	3.500	1.000	.170	.500	(1) SDEB-1511CB (1) SDEB-2151CB	164T 300T	T-6 T-8

Chipbreaker Inserts

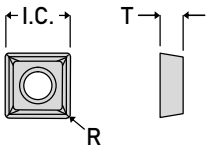

Insert Info.

Insert #	I.C.	T	R	Grades	
SDEB-1511CB	.187	.082	.015	K11	K22
SDEB-2151CB	.250	.093	.015	K11	K22

Speed and Feed Info.

Material	S.F.M.	Drilling I.P.R.	Milling I.P.R.
Mild & Low Carbon Steel *Ex. 1018, 1020, 1117, 1141, 12L14*	800 - 1200	.0015 - .003	.004 - .006
High Carbon & Alloy Steel *Ex. 1045, 4140, 4340, 52100, 8620*	500 - 800	.0015 - .002	.004 - .006
Lower Carbon Tool Steel *Ex. P-20, H-13, S-7*	400 - 700	.0015 - .002	.004 - .006
Tool Steel *Ex. A-2, A-6, D-2, M-2*	300 - 600	.0015 - .002	.004 - .006
Stainless Steel *Ex. 304, 316, 420, 15-5PH, 17-4PH*	300 - 600	.0015 - .002	.004 - .006
Iron *Ex. Cast, Ductile, Nodular*	600 - 1000	.0015 - .004	.004 - .007
Nickel & Titanium Alloy *Ex. Inconel, Hastelloy, TI-6AL-4V*	120 - 180	.0015 - .002	.002 - .004
Non-Ferrous Metal *Ex. Aluminum, Bronze, Brass*	1000 - 2500	.0015 - .004	.004 - .007

2 Effective Center Cutting Endmills

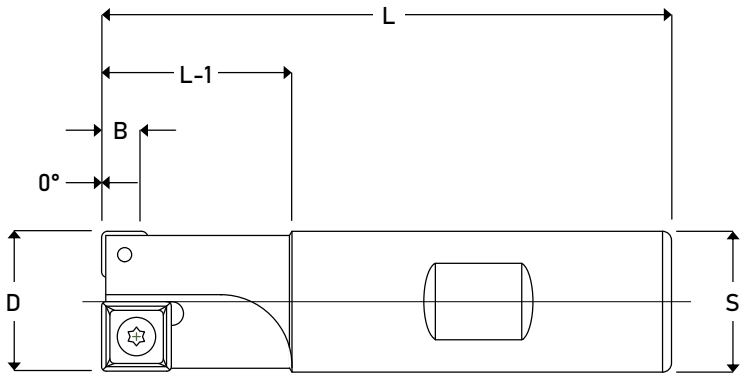

Tool Info.

Tool #	D	L	L-1	B	S	(Milling) Inserts		(Drilling)	Screw	Wrench
DMT-625	.625	3.000	1.000	.215	.750	(1) SDEB-2522P & (1) SPEB-222P	or	(1) SDEB-2522CB & (1) SPEB-222CB	300T	T-8
XDMT-625	.625	4.000	1.250	.215	.750				300T	T-8
DMT-750	.750	3.000	1.000	.215	.750	(1) SPEB-322P & (1) SPEB-222P	or	(1) SPEB-322CB & (1) SPEB-222CB	414T	T-10
XDMT-750	.750	4.250	1.500	.215	.750				314T	T-8

Chipbreaker Inserts

(Drilling or C-Boring)

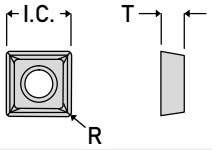

Insert Info.

Insert #	I.C.	T	R	Grades
SPEB-222CB	.250	.125	.031	K11 K22
SDEB-2522CB	.312	.125	.031	K11 K22
SPEB-322CB	.375	.125	.031	K11 K22

Positive Top Inserts

(Milling)

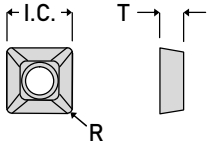

Insert Info.

Insert #	I.C.	T	R	Grades
SPEB-222P	.250	.125	.031	D66 K11 K22
SDEB-2522P	.312	.125	.031	K11
SPEB-322P	.375	.125	.031	D66 K11 K22

IMPORTANT

When ordering inserts

Order all Positive Top Inserts When Ramping or Pocket Milling

Order all Chipbreaker Inserts When Drilling or C-Boring

Speed and Feed Info.

Material	S.F.M.	Drilling I.P.R.	Milling I.P.R.
Mild & Low Carbon Steel *Ex. 1018, 1020, 1117, 1141, 12L14*	800 - 1200	.003 - .005	.004 - .008
High Carbon & Alloy Steel *Ex. 1045, 4140, 4340, 52100, 8620*	500 - 800	.003 - .005	.004 - .008
Lower Carbon Tool Steel *Ex. P-20, H-13, S-7*	400 - 700	.003 - .005	.004 - .008
Tool Steel *Ex. A-2, A-6, D-2, M-2*	300 - 600	.003 - .005	.004 - .008
Stainless Steel *Ex. 304, 316, 420, 15-5PH, 17-4PH*	300 - 600	.003 - .005	.004 - .008
Iron *Ex. Cast, Ductile, Nodular*	600 - 1000	.003 - .005	.004 - .010
Nickel & Titanium Alloy *Ex. Inconel, Hastelloy, TI-6AL-4V*	120 - 180	.002 - .004	.002 - .004
Non-Ferrous Metal *Ex. Aluminum, Bronze, Brass*	1000 - 2500	.003 - .005	.004 - .010

2 Effective Center Cutting Endmills

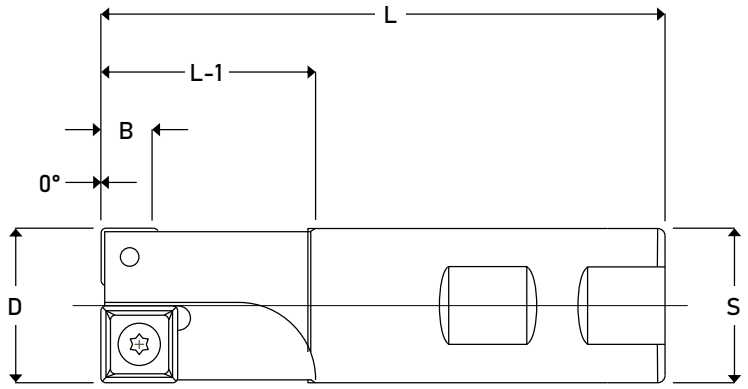

Tool Info.

Tool #	D	L	L-1	B	S	(Milling)	Inserts	(Drilling)	Screw	Wrench
DMT-875	.875	3.625	1.375	.280	1.000	(1) SPEB-3522PA & (1) SPEB-2522P	or	N/A & (1) SPEB-2522CB	614T 314T	T-15 T-8
DMT-100	1.000	3.625	1.375	.340	1.000	(1) SPEB-422PA & (1) SPEB-322P	or	(1) SPEB-422CB & (1) SPEB-322CB	638T 414T	T-15 T-10
XDMT-100	1.000	5.250	2.000	.340	1.000					

Chipbreaker Inserts

(Drilling or C-Boring)

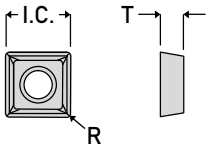

IMPORTANT

When ordering inserts

Order all Positive Top Inserts When Ramping or Pocket Milling

Order all Chipbreaker Inserts When Drilling or C-Boring

Insert Info.

Insert #	I.C.	T	R	Grades
SPEB-2522CB	.312	.125	.031	K11 K22
SPEB-322CB	.375	.125	.031	K11 K22
SPEB-422CB	.500	.125	.031	K11 K22

Positive Top Inserts

(Milling)

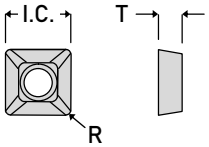

Insert Info.

Insert #	I.C.	T	R	Grades
SPEB-2522P	.312	.125	.031	K11
SPEB-322P	.375	.125	.031	K11
SPEB-3522PA	.437	.125	.031	K11
SPEB-422PA	.500	.125	.031	K11

Speed and Feed Info.

Material	S.F.M.	Drilling I.P.R.	Milling I.P.R.
Mild & Low Carbon Steel *Ex. 1018, 1020, 1117, 1141, 12L14*	800 - 1200	.003 - .005	.004 - .008
High Carbon & Alloy Steel *Ex. 1045, 4140, 4340, 52100, 8620*	500 - 800	.003 - .005	.004 - .008
Lower Carbon Tool Steel *Ex. P-20, H-13, S-7*	400 - 700	.003 - .005	.004 - .008
Tool Steel *Ex. A-2, A-6, D-2, M-2*	300 - 600	.003 - .005	.004 - .008
Stainless Steel *Ex. 304, 316, 420, 15-5PH, 17-4PH*	300 - 600	.003 - .005	.004 - .008
Iron *Ex. Cast, Ductile, Nodular*	600 - 1000	.003 - .005	.004 - .010
Nickel & Titanium Alloy *Ex. Inconel, Hastelloy, TI-6AL-4V*	120 - 180	.002 - .004	.002 - .004
Non-Ferrous Metal *Ex. Aluminum, Bronze, Brass*	1000 - 2500	.003 - .005	.004 - .010

2 Effective Center Cutting Endmills

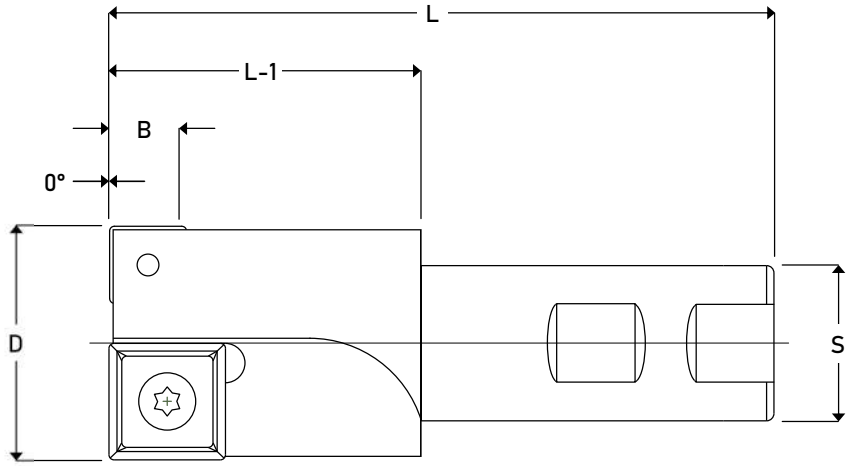

Tool Info.

Tool #	D	L	L-1	B	S	(Milling) Inserts		(Drilling)	Screw	Wrench
DMT-1250	1.250	4.000	1.750	.465	1.000	(1) SPEB-432PA &	or	(1) SPEB-432CB &	638T	T-15
XDMT-1250	1.250	5.000	2.750	.465	1.250	(1) SPEB-532PA		(1) SPEB-532CB	838T	T-20
DMT-1500	1.500	4.250	2.000	.465	1.000	(1) SPEB-432PA &	or	(1) SPEB-432CB &	638T	T-15
XDMT-1500	1.500	5.250	3.000	.465	1.250	(1) SPEB-6352PA		(1) SPEB-6352CB	1012T	T-25
DMT-2000	2.000	4.750	2.500	.715	1.250	(1) SPEB-6352PA &	or	(1) SPEB-6352CB &	1012T	T-25
XDMT-2000	2.000	6.250	4.000	.715	1.250	(1) SPEB-842PA		(1) SPEB-842CB	1412T	T-532

Chipbreaker Inserts

(Drilling or C-Boring)

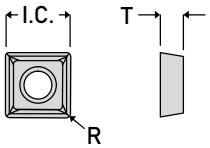

IMPORTANT

When ordering inserts
Order all Positive Top Inserts When Ramping or Pocket Milling
Order all Chipbreaker Inserts When Drilling or C-Boring

Insert Info.

Insert #	I.C.	T	R	Grades
SPEB-432CB	.500	.187	.031	K11 K22
SPEB-532CB	.625	.187	.031	K11K22
SPEB-6352CB	.750	.220	.031	K11 K22
SPEB-842CB	1.000	.250	.031	K11

Positive Top Inserts

(Milling)

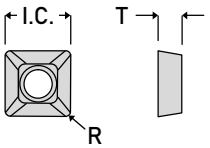

Insert Info.

Insert #	I.C.	T	R	Grades
SPEB-432PA	.500	.187	.031	D66 K11 K22
SPEB-532PA	.625	.187	.031	D66 K11 K22
SPEB-6352PA	.750	.220	.031	D66 K11 K22
SPEB-842PA	1.000	.250	.031	K11

Speed and Feed Info.

Material	S.F.M.	Drilling I.P.R.	Milling I.P.R.
Mild & Low Carbon Steel *Ex. 1018, 1020, 1117, 1141, 12L14*	800 - 1200	.003 - .005	.004 - .008
High Carbon & Alloy Steel *Ex. 1045, 4140, 4340, 52100, 8620*	500 - 800	.003 - .005	.004 - .008
Lower Carbon Tool Steel *Ex. P-20, H-13, S-7*	400 - 700	.003 - .005	.004 - .008
Tool Steel *Ex. A-2, A-6, D-2, M-2*	300 - 600	.003 - .005	.004 - .008
Stainless Steel *Ex. 304, 316, 420, 15-5PH, 17-4PH*	300 - 600	.003 - .005	.004 - .008
Iron *Ex. Cast, Ductile, Nodular*	600 - 1000	.003 - .005	.004 - .010
Nickel & Titanium Alloy *Ex. Inconel, Hastelloy, TI-6AL-4V*	120 - 180	.002 - .004	.002 - .004
Non-Ferrous Metal *Ex. Aluminum, Bronze, Brass*	1000 - 2500	.003 - .005	.004 - .010

Drill Mill Twin Long Edge

Cuts A Flat Bottom Within .001
Drill From Solid
2 Effective When Milling or C-Boring
Longer L.O.C. Than Drill Mill Twin

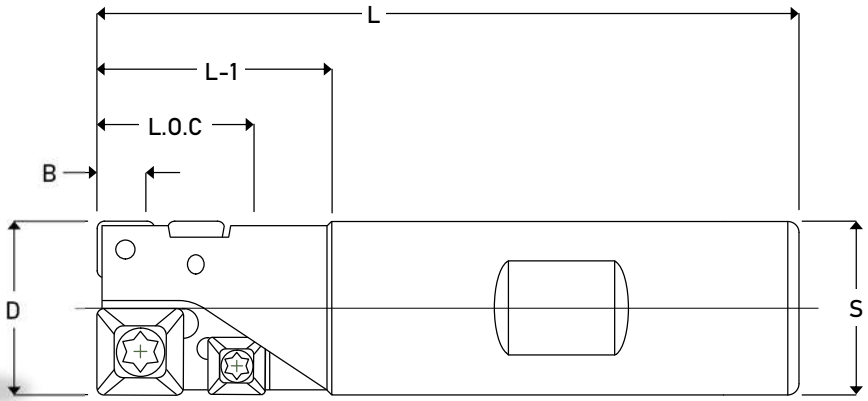

Important : DMTL's are to be run as 1 flute effective at depths more than B dimension.

Tool Info.

Tool #	D	L	L-1	B	L.O.C	S	Inserts	Screw Wrench	Center Insert	Screw Wrench
DMTL-750	.750	3.000	1.000	.215	.700	.750	(3) SPEB-222P	314T T-8	(1) SPEB-322P	414T T-10
DMTL-100	1.000	3.750	1.500	.280	.900	1.000	(3) SPEB-2522P	314T T-8	(1) SPEB-422PA	638T T-15
DMTL-1500	1.500	4.500	2.250	.465	1.500	1.250	(3) SPEB-432PA	638T T-15	(1) SPEB-6352PA	1012T T-25
DMTL-2000	2.000	5.687	3.000	.715	2.125	1.500	(3) SPEB-6352PA	1012T T-25	(1) SPEB-842PA	1412T T-532

Positive Top Inserts

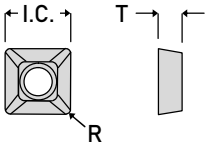

Insert Info.

Insert #	I.C.	T	R	Grades
SPEB-222P	.250	.125	.031	B1M D66 K11 K22
SPEB-2522P	.312	.125	.031	B1M D66 K11 K22
SPEB-322P	.375	.125	.031	B1M D66 K11 K22
SPEB-422PA	.500	.125	.031	K11
SPEB-432PA	.500	.187	.031	B1M D66 K11 K22
SPEB-6352PA	.750	.220	.031	D66 K11 K22
SPEB-842PA	1.000	.250	.031	K11

Speed and Feed Info.

Material	S.F.M.	Drilling I.P.R.	Milling I.P.R.
Mild & Low Carbon Steel *Ex. 1018, 1020, 1117, 1141, 12L14*	400 - 800	.002 - .004	.002 - .005
High Carbon & Alloy Steel *Ex. 1045, 4140, 4340, 52100, 8620*	300 - 500	.002 - .003	.002 - .004
Lower Carbon Tool Steel *Ex. P-20, H-13, S-7*	300 - 500	.002 - .003	.002 - .004
Tool Steel *Ex. A-2, A-6, D-2, M-2*	300 - 500	.001 - .003	.001 - .004
Stainless Steel *Ex. 304, 316, 420, 15-5PH, 17-4PH*	300 - 500	.001 - .003	.001 - .003
Iron *Ex. Cast, Ductile, Nodular*	400 - 800	.002 - .005	.002 - .006
Nickel & Titanium Alloy *Ex. Inconel, Hastelloy, TI-6AL-4V*	100 - 200	.001 - .002	.001 - .002
Non-Ferrous Metal *Ex. Aluminum, Bronze, Brass*	800 - 1200	.003 - .006	.003 - .008

FEC-Mills

Full Effective & Center Cutting
Great for Aluminum & Soft Materials

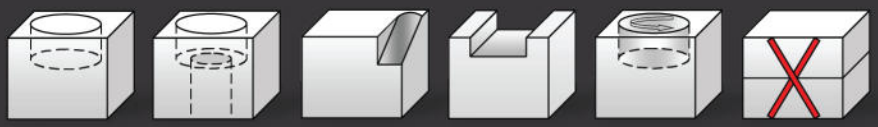

Full Effective Center Cutting

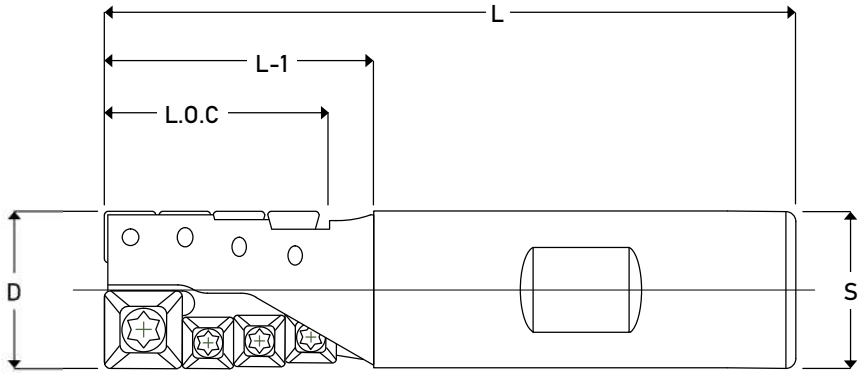

Tool Info.

Tool #	D	Flutes	L	L-1	LOC	S	Insert	Screw Wrench	Center Insert	Screw Wrench
FEC-750	.750	2	3.625	1.375	1.100	.750	(7)SPEB-222P	314T T-8	(1)SPEB-322P	414T T-10
FEC-100	1.000	2	4.250	2.000	1.500	1.000	(8)SPEB-2522P	314T T-8	(1)SPEB-422PA	638T T-15

Positive Top Inserts

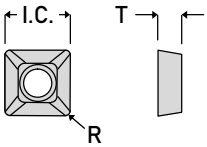

Insert Info.

Insert #	I.C.	T	R	Grades
SPEB-222P	.250	.125	.031	B1M D66 K11 K22
SPEB-2522P	.312	.125	.031	B1M D66 K11 K22
SPEB-322P	.375	.125	.031	B1M D66 K11 K22
SPEB-422PA	.500	.125	.031	K11

Speed and Feed Info.

Material	S.F.M.	Drilling I.P.R.	Milling I.P.R.
Mild & Low Carbon Steel *Ex. 1018, 1020, 1117, 1141, 12L14*	400 - 800	.002 - .004	.002 - .005
High Carbon & Alloy Steel *Ex. 1045, 4140, 4340, 52100, 8620*	300 - 500	.002 - .003	.002 - .004
Lower Carbon Tool Steel *Ex. P-20, H-13, S-7*	300 - 500	.002 - .003	.002 - .004
Tool Steel *Ex. A-2, A-6, D-2, M-2*	300 - 500	.001 - .003	.001 - .004
Stainless Steel *Ex. 304, 316, 420, 15-5PH, 17-4PH*	300 - 500	.001 - .003	.001 - .003
Iron *Ex. Cast, Ductile, Nodular*	400 - 800	.002 - .005	.002 - .006
Nickel & Titanium Alloy *Ex. Inconel, Hastelloy, TI-6AL-4V*	100 - 200	.001 - .002	.001 - .002
Non-Ferrous Metal *Ex. Aluminum, Bronze, Brass*	800 - 1200	.003 - .006	.003 - .008

Full Effective Center Cutting

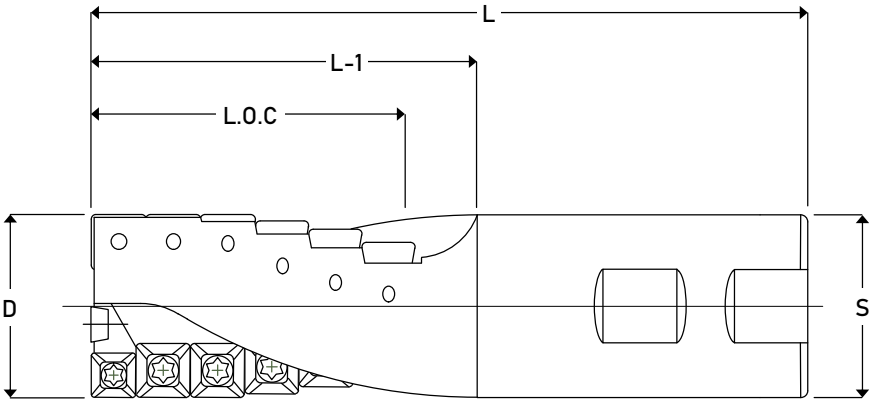

Tool Info.

Tool #	D	Flutes	L	L-1	L.O.C	S	Inserts	Screw Wrench	Center Insert	Screw Wrench
FEC-125	1.250	2	5.125	2.625	2.200	1.250	(1)SPEB-2522P (11)SPEB-332P	314T T-8 538T T-10	(1)SPEB-222F	314T T-8
FEC-150	1.500	3	5.125	2.625	2.200	1.250	(1)SPEB-2522P (17)SPEB-332P	314T T-8 538T T-10	(1)SPEB-322F	438T T-10

Positive Top Inserts

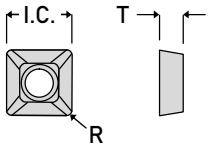

Insert Info.

Insert #	I.C.	T	R	Grades
SPEB-2522P	.312	.125	.031	B1M D66 K11 K22
SPEB-332P	.375	.187	.031	B1M D66 K11 K22

Flat Top Inserts

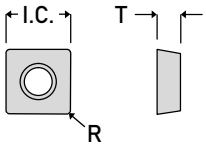

Insert Info.

Insert #	I.C.	T	R	Grade
SPEB-222F	.250	.125	.031	X11
SPEB-322F	.375	.125	.031	X11

Speed and Feed Info.

Material	S.F.M.	Drilling I.P.R.	Milling I.P.R.
Mild & Low Carbon Steel *Ex. 1018, 1020, 1117, 1141, 12L14*	400 - 800	.002 - .004	.002 - .005
High Carbon & Alloy Steel *Ex. 1045, 4140, 4340, 52100, 8620*	300 - 500	.002 - .003	.002 - .004
Lower Carbon Tool Steel *Ex. P-20, H-13, S-7*	300 - 500	.002 - .003	.002 - .004
Tool Steel *Ex. A-2, A-6, D-2, M-2*	300 - 500	.001 - .003	.001 - .004
Stainless Steel *Ex. 304, 316, 420, 15-5PH, 17-4PH*	300 - 500	.001 - .003	.001 - .003
Iron *Ex. Cast, Ductile, Nodular*	400 - 800	.002 - .005	.002 - .006
Nickel & Titanium Alloy *Ex. Inconel, Hastelloy, TI-6AL-4V*	100 - 200	.001 - .002	.001 - .002
Non-Ferrous Metal *Ex. Aluminum, Bronze, Brass*	800 - 1200	.003 - .006	.003 - .008

Full Effective Center Cutting

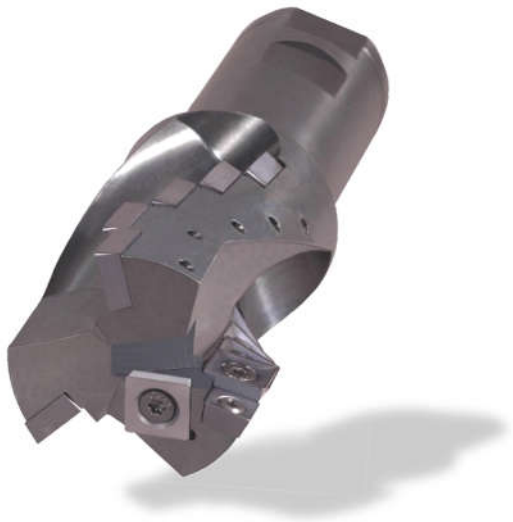

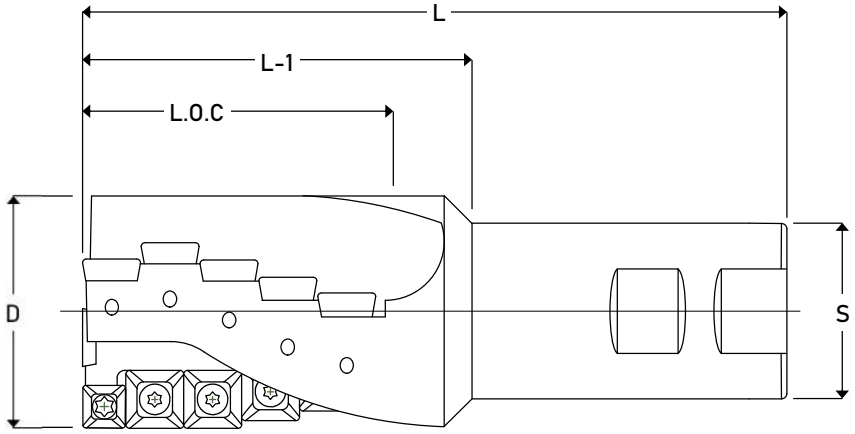

Tool Info.

Tool #	D	Flutes	L	L-1	L.O.C	S	Inserts	Screw Wrench	Center Insert	Screw Wrench
FEC-202	2.000	3	6.000	3.312	2.375	1.500	(1)SPEB-332P (14)SPEB-432PA	538T T-10 638T T-15	(1)SPEB-422F	638T T-15
FEC-204	2.000	3	7.875	4.625	3.812	2.000	(1)SPEB-332P (23)SPEB-432PA	538T T-10 638T T-15	(1)SPEB-422F	638T T-15

Positive Top Inserts

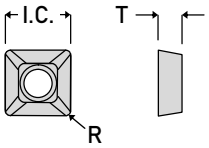

Insert Info.

Insert #	I.C.	T	R	Grades
SPEB-332P	.375	.187	.031	B1M C55 X33 X40
SPEB-432PA	.500	.187	.031	B1M C55 X33 X40

Flat Top Insert

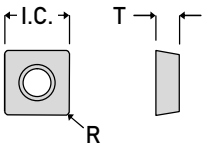

Insert Info.

Insert #	I.C.	T	R	Grade
SPEB-422F	.500	.125	.031	K11

Speed and Feed Info.

Material	S.F.M.	Drilling I.P.R.	Milling I.P.R.
Mild & Low Carbon Steel *Ex. 1018, 1020, 1117, 1141, 12L14*	400 - 800	.002 - .004	.002 - .005
High Carbon & Alloy Steel *Ex. 1045, 4140, 4340, 52100, 8620*	300 - 500	.002 - .003	.002 - .004
Lower Carbon Tool Steel *Ex. P-20, H-13, S-7*	300 - 500	.002 - .003	.002 - .004
Tool Steel *Ex. A-2, A-6, D-2, M-2*	300 - 500	.001 - .003	.001 - .004
Stainless Steel *Ex. 304, 316, 420, 15-5PH, 17-4PH*	300 - 500	.001 - .003	.001 - .003
Iron *Ex. Cast, Ductile, Nodular*	400 - 800	.002 - .005	.002 - .006
Nickel & Titanium Alloy *Ex. Inconel, Hastelloy, TI-6AL-4V*	100 - 200	.001 - .002	.001 - .002
Non-Ferrous Metal *Ex. Aluminum, Bronze, Brass*	800 - 1200	.003 - .006	.003 - .008

Counterbore Tools

Cuts a Flat Counterbore Within .001
Standard & Metric S.H.C.S Sizes
Coolant Thru Standard on CBN Tools
Piloted Tools for Manual Applications
Back Counterbores - Adjustable Style

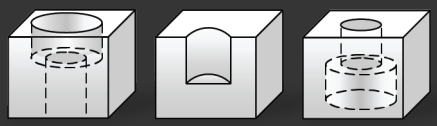

Standard

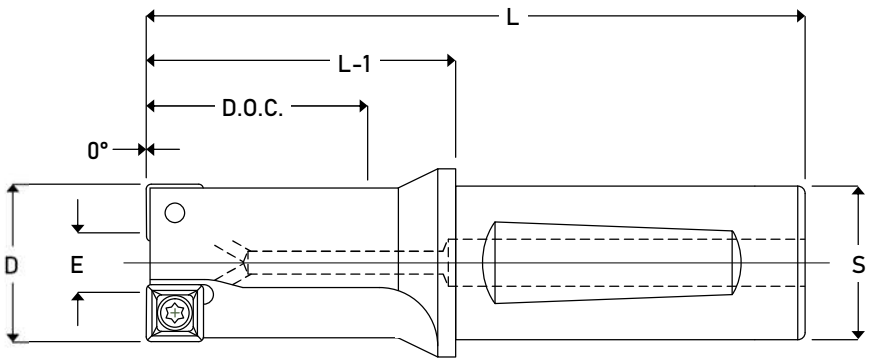

Coolant Thru

CBN

Counterbore Tools

Tool Info.

Tool #	S.H.C.S. Size	Flutes	D	E	L	L-1	D.O.C	S	Insert	Screw	Wrench
CBN-500	5/16	2	.500	.180	2.812	1.062	.625	.500	SPEB-1511CB	164T	T-6
CBN-531	N/A	2	.531	.200	2.812	1.062	.625	.500	SPEB-1511CB	164T	T-6
CBN-562	N/A	2	.562	.240	2.875	1.125	.687	.500	SPEB-1511CB	164T	T-6
CBN-594	3/8	2	.594	.150	3.375	1.375	.750	.750	SPEB-221CB	300T	T-8
CBN-625	N/A	2	.625	.180	3.437	1.437	.812	.750	SPEB-221CB	314T	T-8
CBN-687	7/16	2	.687	.240	3.500	1.500	.875	.750	SPEB-221CB	314T	T-8
CBN-718	N/A	2	.718	.188	3.500	1.500	.875	.750	SPEB-2522CB	314T	T-8
CBN-750	N/A	2	.750	.210	3.625	1.625	.937	.750	SPEB-2522CB	314T	T-8
CBN-781	1/2	2	.781	.260	3.625	1.625	1.000	.750	SPEB-2522CB	314T	T-8
CBN-812	N/A	2	.812	.280	3.625	1.625	1.000	.750	SPEB-2522CB	314T	T-8
CBN-906	9/16	2	.906	.260	4.000	1.750	1.125	1.000	SPEB-332CB	538T	T-10
CBN-1000	5/8	2	1.000	.360	4.125	1.875	1.250	1.000	SPEB-332CB	538T	T-10
CBN-1187	3/4	2	1.187	.290	4.500	2.250	1.500	1.000	SPEB-432CB	638T	T-15
CBN-1250	N/A	2	1.250	.350	4.625	2.375	1.625	1.000	SPEB-432CB	638T	T-15
CBN-1375	7/8	2	1.375	.480	4.750	2.500	1.750	1.000	SPEB-432CB	638T	T-15
CBN-1437	N/A	2	1.437	.520	4.812	2.562	1.812	1.000	SPEB-432CB	638T	T-15
CBN-1500	N/A	2	1.500	.340	4.875	2.625	1.875	1.000	SPEB-532CB	838T	T-20
CBN-1625	1"	2	1.625	.480	5.000	2.750	2.000	1.000	SPEB-532CB	838T	T-20
CBN-1812	N/A	2	1.812	.400	5.250	3.000	2.250	1.000	SPEB-532CB	838T	T-20
CBN-2000	N/A	2	2.000	.590	5.500	3.000	2.500	1.250	SPEB-6352CB	1012T	T-25

Chipbreaker Inserts

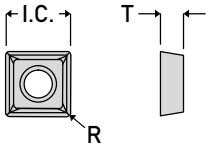

Insert Info.

Insert #	I.C.	T	R	Grades
SPEB-1511CB	.187	.082	.015	K11 K22
SPEB-221CB	.250	.125	.015	K11 K22
SPEB-2522CB	.312	.125	.031	K11 K22
SPEB-332CB	.375	.187	.031	K11 K22
SPEB-432CB	.500	.187	.031	K11 K22
SPEB-532CB	.625	.187	.031	K11 K22
SPEB-6352CB	.750	.220	.031	K11 K22

Speed and Feed Info.

Material	S.F.M.	.500 Dia. I.P.T.	.531 - .781 Dia. I.P.T.	.812 - 2.000 Dia. I.P.T.
Mild & Low Carbon Steel *Ex. 1018, 1020, 1117, 1141, 12L14*	800 - 1200	.001 - .003	.002 - .004	.003 - .005
High Carbon & Alloy Steel *Ex. 1045, 4140, 4340, 52100, 8620*	500 - 800	.001 - .003	.002 - .003	.003 - .005
Lower Carbon Tool Steel *Ex. P-20, H-13, S-7*	400 - 700	.001 - .003	.002 - .003	.003 - .005
Tool Steel *Ex. A-2, A-6, D-2, M-2*	300 - 600	.001 - .003	.001 - .003	.002 - .004
Stainless Steel *Ex. 304, 316, 420, 15-5PH, 17-4PH*	300 - 600	.001 - .003	.001 - .003	.002 - .004
Iron *Ex. Cast, Ductile, Nodular*	600 - 1000	.002 - .005	.002 - .005	.003 - .006
Nickel & Titanium Alloy *Ex. Inconel, Hastelloy, TI-6AL-4V*	120 - 180	.001 - .002	.001 - .002	.002 - .003
Non-Ferrous Metal *Ex. Aluminum, Bronze, Brass*	1000 - 2500	.003 - .006	.003 - .006	.004 - .008

K-Tool, Inc.

Metric

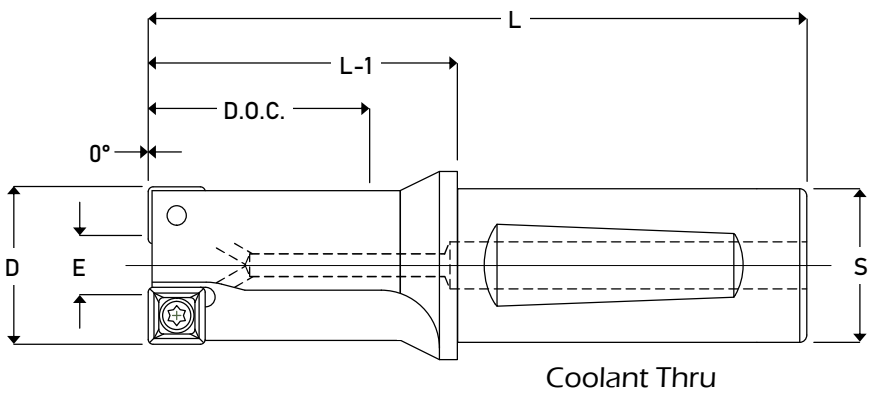

Tool Info.

Tool #	S.H.C.S. Size	Flutes	D	E	L	L-1	D.O.C	S	Insert	Screw	Wrench
CBN-11MM	M-6	2	.433	.120	2.750	1.000	.563	.500	SPEB-1511CB	164T	T-6
CBN-15MM	M-8	2	.590	.150	3.250	1.250	.625	.750	SPEB-221CB	300T	T-8
CBN-16MM	N/A	2	.630	185	3.437	1.437	.812	.750	SPEB-221CB	314T	T-8
CBN-18MM	M-10	2	.709	.188	3.500	1.500	.875	.750	SPEB-2522CB	314T	T-8
CBN-20MM	M-12	2	.787	.250	3.625	1.625	.937	.750	SPEB-2522CB	314T	T-8
CBN-22MM	N/A	2	.866	.290	4.000	1.750	1.156	1.000	SPEB-2522CB	314T	T-8
CBN-24MM	M-14	2	.945	.290	4.000	1.750	1.156	1.000	SPEB-332CB	538T	T-10
CBN-26MM	M-16	2	1.024	.370	4.250	2.000	1.375	1.000	SPEB-332CB	538T	T-10
CBN-29MM	M-18	2	1.142	.240	4.500	2.250	1.531	1.000	SPEB-432CB	638T	T-15
CBN-31MM	N/A	2	1.220	.300	4.500	2.250	1.562	1.000	SPEB-432CB	638T	T-15
CBN-33MM	M-20	2	1.299	.390	4.625	2.375	1.625	1.000	SPEB-432CB	638T	T-15
CBN-38MM	M-24	2	1.496	.350	5.000	2.750	2.000	1.000	SPEB-532CB	838T	T-20
CBN-48MM	M-30	2	1.890	.490	5.375	3.125	2.375	1.000	SPEB-6352CB	1012T	T-25

Chipbreaker Inserts

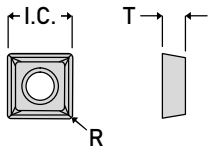

Insert Info.

Insert #	I.C.	T	R	Grades
SPEB-1511CB	.187	.082	.015	K11 K22
SPEB-221CB	.250	.125	.015	K11 K22
SPEB-2522CB	.312	.125	.031	K11 K22
SPEB-332CB	.375	.187	.031	K11 K22
SPEB-432CB	.500	.187	.031	K11 K22
SPEB-532CB	.625	.187	.031	K11 K22
SPEB-6352CB	.750	.220	.031	K11 K22

Speed and Feed Info.

Material	S.F.M.	.433 Dia. I.P.T.	.590 - .787 Dia. I.P.T.	.866 - 1.890 Dia. I.P.T.
Mild & Low Carbon Steel *Ex. 1018, 1020, 1117, 1141, 12L14*	800 - 1200	.001 - .003	.002 - .004	.003 - .005
High Carbon & Alloy Steel *Ex. 1045, 4140, 4340, 52100, 8620*	500 - 800	.001 - .003	.002 - .003	.003 - .005
Lower Carbon Tool Steel *Ex. P-20, H-13, S-7*	400 - 700	.001 - .003	.002 - .003	.003 - .005
Tool Steel *Ex. A-2, A-6, D-2, M-2*	300 - 600	.001 - .003	.001 - .003	.002 - .004
Stainless Steel *Ex. 304, 316, 420, 15-5PH, 17-4PH*	300 - 600	.001 - .003	.001 - .003	.002 - .004
Iron *Ex. Cast, Ductile, Nodular*	600 - 1000	.002 - .005	.002 - .005	.003 - .006
Nickel & Titanium Alloy *Ex. Inconel, Hastelloy, TI-6AL-4V*	120 - 180	.001 - .002	.001 - .002	.002 - .003
Non-Ferrous Metal *Ex. Aluminum, Bronze, Brass*	1000 - 2500	.003 - .006	.003 - .006	.004 - .008

Standard

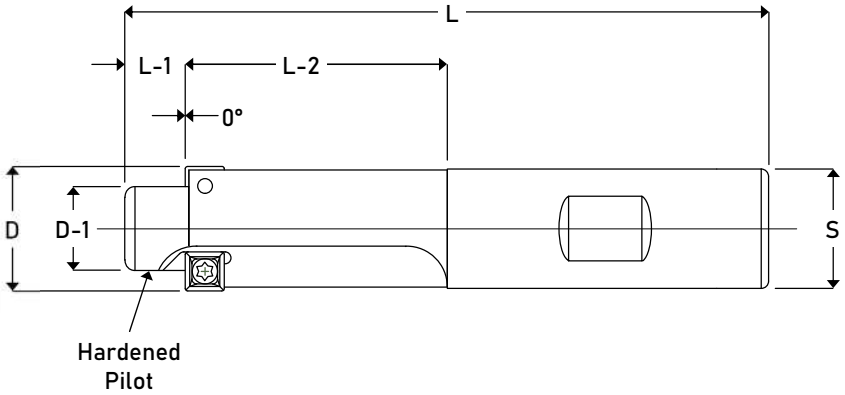

Tool Info.

Tool #	S.H.C.S. Size	Flutes	D	D-1	L	L-1	L-2	S	Insert	Screw	Wrench
CB-359	#10	1	.359	.215	3.250	.250	1.000	.500	SDEB-1511CB	164T	T-6
CB-406	1/4	1	.406	.280	3.250	.250	1.000	.500	SPEB-221CB	300T	T-8
CB-500	5/16	1	.500	.342	3.500	.312	1.187	.500	SPEB-221CB	300T	T-8
CB-594	3/8	2	.594	.405	3.625	.312	1.312	.500	SPEB-221CB	300T	T-8
CB-687	7/16	2	.687	.467	3.750	.375	1.375	.500	SPEB-221CB	300T	T-8
CB-781	1/2	2	.781	.530	4.000	.375	1.625	.750	SPEB-221CB	314T	T-8
CB-1000	5/8	2	1.000	.655	4.125	.500	1.625	.750	SPEB-221CB	314T	T-8
CB-1187	3/4	2	1.187	.812	4.250	.500	1.750	.750	SPEB-221CB	314T	T-8

Chipbreaker Inserts

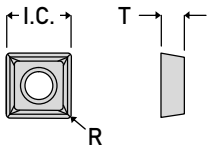

Insert Info.

Insert #	I.C.	T	R	Grades
SDEB-1511CB	.187	.082	.015	K11 K22
SPEB-221CB	.250	.125	.015	K11 K22

Speed and Feed Info.

Material	S.F.M.	.359 - .500 Dia. I.P.T.	.594 - 1.187 Dia. I.P.T.
Mild & Low Carbon Steel *Ex. 1018, 1020, 1117, 1141, 12L14*	800 - 1200	.001 - .002	.002 - .003
High Carbon & Alloy Steel *Ex. 1045, 4140, 4340, 52100, 8620*	500 - 800	.001 - .002	.002 - .003
Lower Carbon Tool Steel *Ex. P-20, H-13, S-7*	400 - 700	.001 - .002	.002 - .003
Tool Steel *Ex. A-2, A-6, D-2, M-2*	300 - 600	.001 - .002	.002 - .003
Stainless Steel *Ex. 304, 316, 420, 15-5PH, 17-4PH*	300 - 600	.001 - .002	.002 - .003
Iron *Ex. Cast, Ductile, Nodular*	600 - 1000	.001 - .002	.002 - .003
Nickel & Titanium Alloy *Ex. Inconel, Hastelloy, TI-6AL-4V*	120 - 180	.001 - .002	.001 - .002
Non-Ferrous Metal *Ex. Aluminum, Bronze, Brass*	1000 - 2500	.001 - .002	.002 - .003

K-Tool, Inc.

Metric

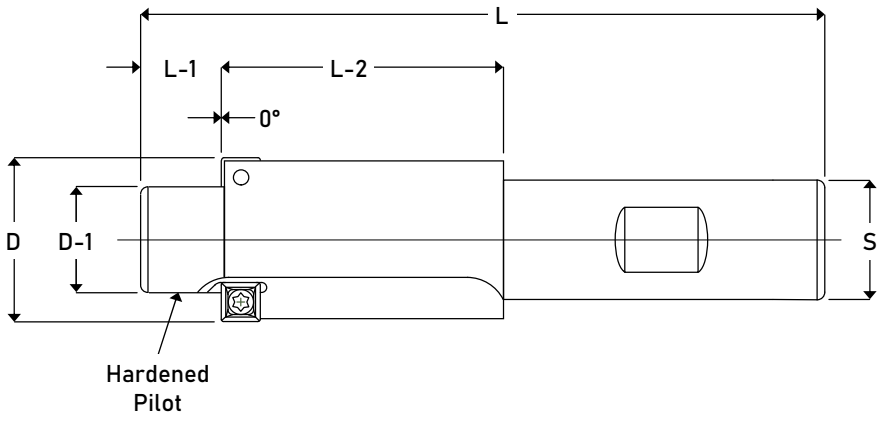

Tool Info.

Tool #	S.H.C.S. Size	Flutes	D	D-1	L	L-1	L-2	S	Insert	Screw	Wrench
CB-11MM	M-6	1	.433	.258	3.250	.250	1.000	.500	SPEB-221CB	300T	T-8
CB-15MM	M-8	2	.590	.352	3.625	.312	1.312	.500	SPEB-221CB	300T	T-8
CB-18MM	M-10	2	.709	.431	3.750	.375	1.375	.500	SPEB-221CB	300T	T-8
CB-20MM	M-12	2	.787	.549	4.000	.375	1.625	.750	SPEB-221CB	314T	T-8
CB-24MM	M-14	2	.945	.588	4.125	.500	1.625	.750	SPEB-221CB	314T	T-8
CB-26MM	M-16	2	1.023	.667	4.250	.500	1.750	.750	SPEB-221CB	314T	T-8
CB-33MM	M-20	2	1.298	.824	4.250	.500	1.750	.750	SPEB-221CB	314T	T-8

Chipbreaker Insert

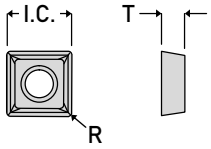

Insert Info.

Insert #	I.C.	T	R	Grades
SPEB-221CB	.250	.125	.015	K11 K22

Speed and Feed Info.

Material	S.F.M.	.433 Dia. I.P.T.	.590 - 1.298 Dia. I.P.T.
Mild & Low Carbon Steel *Ex. 1018, 1020, 1117, 1141, 12L14*	800 - 1200	.001 - .002	.002 - .003
High Carbon & Alloy Steel *Ex. 1045, 4140, 4340, 52100, 8620*	500 - 800	.001 - .002	.002 - .003
Lower Carbon Tool Steel *Ex. P-20, H-13, S-7*	400 - 700	.001 - .002	.002 - .003
Tool Steel *Ex. A-2, A-6, D-2, M-2*	300 - 600	.001 - .002	.002 - .003
Stainless Steel *Ex. 304, 316, 420, 15-5PH, 17-4PH*	300 - 600	.001 - .002	.002 - .003
Iron *Ex. Cast, Ductile, Nodular*	600 - 1000	.001 - .002	.002 - .003
Nickel & Titanium Alloy *Ex. Inconel, Hastelloy, TI-6AL-4V*	120 - 180	.001 - .002	.001 - .002
Non-Ferrous Metal *Ex. Aluminum, Bronze, Brass*	1000 - 2500	.001 - .002	.002 - .003

Adjustable

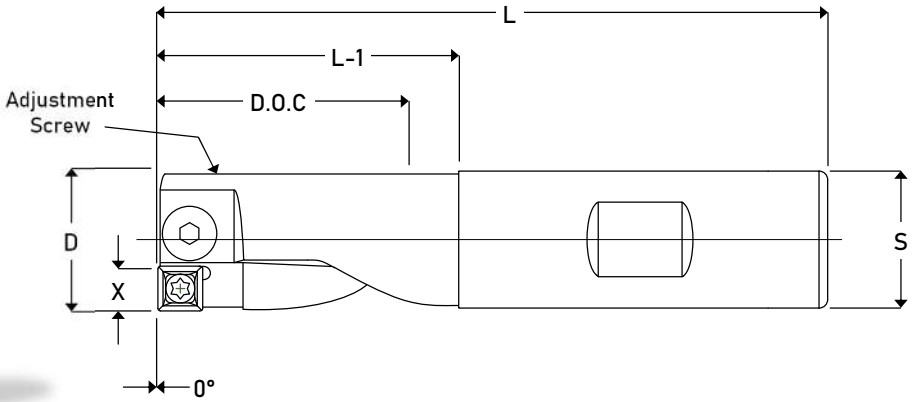

.600 - .750 Dia.			Tool Info.				
Tool #	D	Flutes	X	L	L-1	D.O.C.	S
CH-600-750	.600 to .750	1	.172	3.500	1.500	1.250	.750

Cartridge	Cartridge Screw	Adjustment Screw	Insert	Insert Screw	Wrench
CH-1511	#63212	5-40 x 1/4	SPEB-1511CB	164T	T-6

.750 - .937 Dia.			Tool Info.				
Tool #	D	Flutes	X	L	L-1	D.O.C.	S
CH-750-937	.750 to .937	1	.235	3.750	1.750	1.375	.750

Cartridge	Cartridge Screw	Adjustment Screw	Insert	Insert Screw	Wrench
CH-221	#103262	5-40 x 1/4	SPEB-221CB	300T	T-8

Chipbreaker Inserts

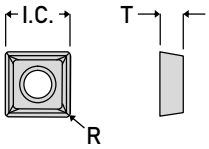

Insert Info.

Insert #	I.C.	T	R	Grades
SPEB-1511CB	.187	.082	.015	K11 K22
SPEB-221CB	.250	.125	.015	K11 K22

Speed and Feed Info.

Material	S.F.M.	I.P.R.
Mild & Low Carbon Steel *Ex. 1018, 1020, 1117, 1141, 12L14*	800 - 1200	.002 - .003
High Carbon & Alloy Steel *Ex. 1045, 4140, 4340, 52100, 8620*	500 - 800	.002 - .003
Lower Carbon Tool Steel *Ex. P-20, H-13, S-7*	400 - 700	.002 - .003
Tool Steel *Ex. A-2, A-6, D-2, M-2*	300 - 600	.001 - .003
Stainless Steel *Ex. 304, 316, 420, 15-5PH, 17-4PH*	300 - 600	.001 - .002
Iron *Ex. Cast, Ductile, Nodular*	600 - 1000	.002 - .003
Nickel & Titanium Alloy *Ex. Inconel, Hastelloy, TI-6AL-4V*	120 - 180	.001 - .002
Non-Ferrous Metal *Ex. Aluminum, Bronze, Brass*	1000 - 2500	.002 - .004

K-Tool, Inc.

Adjustable

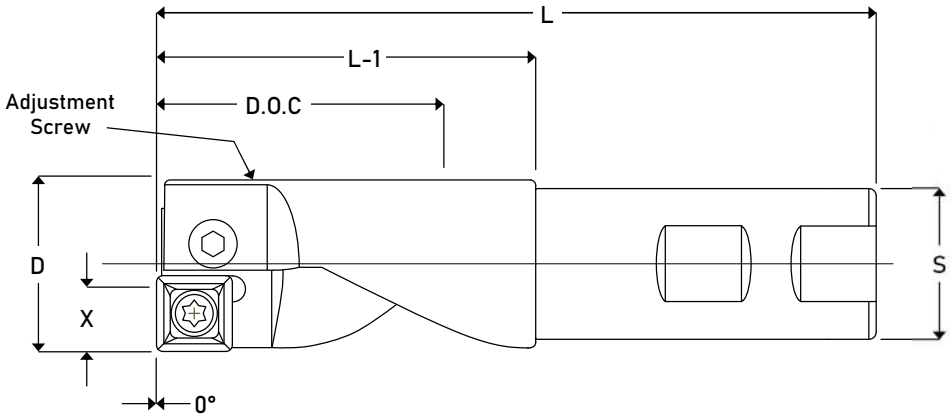

.937 - 1.187 Dia. — Tool Info.

Tool #	D	Flutes	X	L	L-1	D.O.C.	S
CH-937-1187	.937 to 1.187	1	.280	4.500	2.250	1.875	1.000

Cartridge	Cartridge Screw	Adjustment Screw	Insert	Insert Screw	Wrench
CH-2522	#103262	5-40 x 1/4	SPEB-2522CB	300T	T-8

1.187 - 1.437 Dia. — Tool Info.

Tool #	D	Flutes	X	L	L-1	D.O.C.	S
CH-1187-1437	1.187 to 1.437	1	.465	4.500	2.250	1.875	1.000

Cartridge	Cartridge Screw	Adjustment Screw	Insert	Insert Screw	Wrench
CH-432	#142878	6-32 x 1/4	SPEB-432CB	638T	T-15

1.437 - 1.687 Dia. — Tool Info.

Tool #	D	Flutes	X	L	L-1	D.O.C.	S
CH-1437-1687	1.437 to 1.687	1	.465	4.500	2.250	1.875	1.000

Cartridge	Cartridge Screw	Adjustment Screw	Insert	Insert Screw	Wrench
CH-432	#142810	6-32 x 3/8	SPEB-432CB	638T	T-15

Chipbreaker Inserts

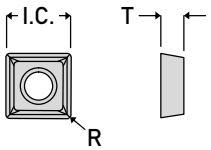

Insert Info.

Insert #	I.C.	T	R	Grades
SPEB-2522CB	.312	.125	.031	K11 K22
SPEB-432CB	.500	.187	.031	K11 K22

Speed and Feed Info.

Material	S.F.M.	I.P.R.
Mild & Low Carbon Steel *Ex. 1018, 1020, 1117, 1141, 12L14*	800 - 1200	.002 - .003
High Carbon & Alloy Steel *Ex. 1045, 4140, 4340, 52100, 8620*	500 - 800	.002 - .003
Lower Carbon Tool Steel *Ex. P-20, H-13, S-7*	400 - 700	.002 - .003
Tool Steel *Ex. A-2, A-6, D-2, M-2*	300 - 600	.001 - .003
Stainless Steel *Ex. 304, 316, 420, 15-5PH, 17-4PH*	300 - 600	.001 - .002
Iron *Ex. Cast, Ductile, Nodular*	600 - 1000	.002 - .003
Nickel & Titanium Alloy *Ex. Inconel, Hastelloy, TI-6AL-4V*	120 - 180	.001 - .002
Non-Ferrous Metal *Ex. Aluminum, Bronze, Brass*	1000 - 2500	.002 - .004

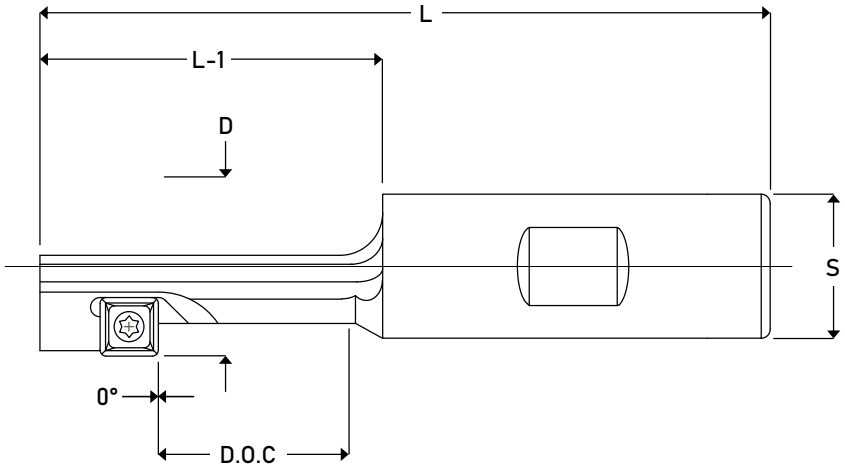

Tool Info.

Tool #	S.H.C.S. Size	Flutes	D	L	L-1	D.O.C	S	Insert	Screw	Wrench
BCB-500	5/16	1	.500	2.937	1.187	.750	.500	SPEB-1511CB	164T	T-6
BCB-594	3/8	1	.594	2.937	1.187	.750	.500	SPEB-1511CB	164T	T-6
BCB-687	7/16	1	.687	3.625	1.625	1.000	.750	SPEB-221CB	300T	T-8
BCB-781	1/2	1	.781	3.812	1.812	1.250	.750	SPEB-221CB	314T	T-8
BCB-1000	5/8	1	1.000	4.562	2.312	1.625	1.000	SPEB-221CB	314T	T-8
BCB-1187	3/4	1	1.187	4.812	2.562	1.937	1.000	SPEB-221CB	314T	T-8

Tool #	Min. Existing Hole Dia.	Offset to Enter Hole
BCB-500	.320	.100
BCB-594	.390	.110
BCB-687	.450	.120
BCB-781	.510	.135
BCB-1000	.640	.180
BCB-1187	.800	.195

Chipbreaker Inserts

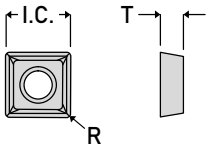

Insert Info.

Insert #	I.C.	T	R	Grades
SPEB-1511CB	.187	.082	.015	K11 K22
SPEB-221CB	.250	.125	.015	K11 K22

Speed and Feed Info.

Material	S.F.M.	I.P.R.
Mild & Low Carbon Steel *Ex. 1018, 1020, 1117, 1141, 12L14*	800 - 1200	.002 - .003
High Carbon & Alloy Steel *Ex. 1045, 4140, 4340, 52100, 8620*	500 - 800	.002 - .003
Lower Carbon Tool Steel *Ex. P-20, H-13, S-7*	400 - 700	.002 - .003
Tool Steel *Ex. A-2, A-6, D-2, M-2*	300 - 600	.001 - .003
Stainless Steel *Ex. 304, 316, 420, 15-5PH, 17-4PH*	300 - 600	.002 - .003
Iron *Ex. Cast, Ductile, Nodular*	600 - 1000	.002 - .003
Nickel & Titanium Alloy *Ex. Inconel, Hastelloy, TI-6AL-4V*	120 - 180	.001 - .002
Non-Ferrous Metal *Ex. Aluminum, Bronze, Brass*	1000 - 2500	.002 - .003

High Feed Mills

Fast Material Removal - Free Cutting
Ramping Capabilities
Available in Shank & Shell Mount

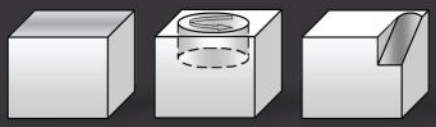

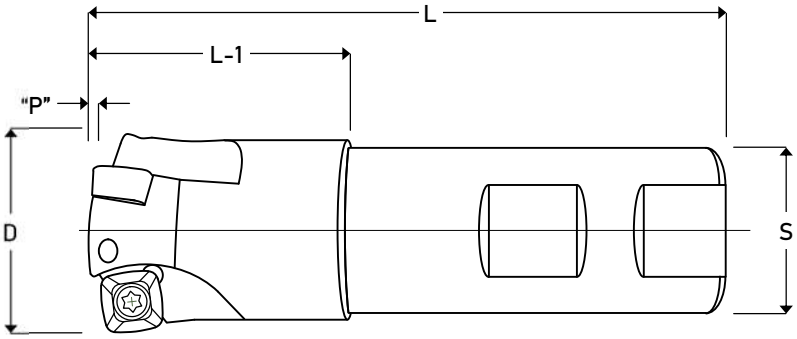

Tool Info.

Tool #	Flutes	D	L	L-1	S	Plunge "P"	Ramp	Insert	Screw	Wrench
HF-100	2	1.000	3.750	1.500	1.000	.031	10°			
HF-125	3	1.250	3.750	1.500	1.000	.031	5°	ARP-33	538T	T-10
HF-150	4	1.500	3.750	1.500	1.000	.031	3°			

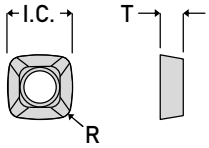

Insert Info.

Insert #	I.C.	T	R	Grades
ARP-33	.375	.187	.062	D66 K11

Speed and Feed Info.

Material	S.F.M.	*Minimum D.O.C. of .032 I.P.T.	**Maximum D.O.C. of .089 I.P.T.
Mild & Low Carbon Steel *Ex. 1018, 1020, 1117, 1141, 12L14*	1000 - 1400	.016 - .041	.010 - .025
High Carbon & Alloy Steel *Ex. 1045, 4140, 4340, 52100, 8620*	800 - 1000	.016 - .032	.010 - .020
Lower Carbon Tool Steel *Ex. P-20, H-13, S-7*	600 - 900	.016 - .032	.010 - .020
Tool Steel *Ex. A-2, A-6, D-2, M-2*	500 - 800	.016 - .032	.016 - .020
Stainless Steel *Ex. 304, 316, 420, 15-5PH, 17-4PH*	500 - 800	.016 - .032	.016 - .020
Iron *Ex. Cast, Ductile, Nodular*	800 - 1200	.016 - .041	.010 - .025
Nickel & Titanium Alloy *Ex. Inconel, Hastelloy, TI-6AL-4V*	350 - 450	.008 - .024	.005 - .015

** Minimum D.O.C. of .032" = 8X Chip Thinning Factor*

*** Maximum D.O.C. of .089" = 5X Chip Thinning Factor*

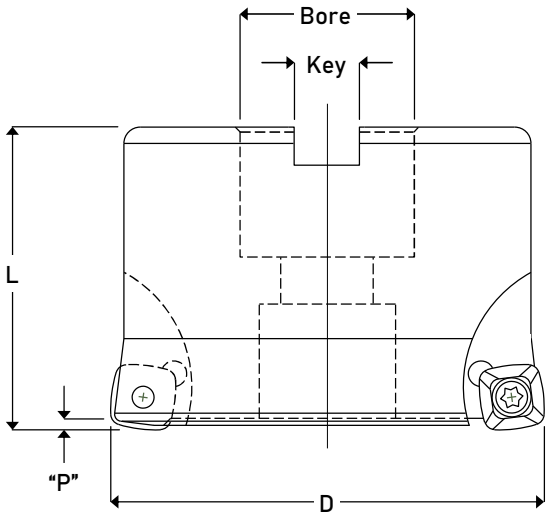

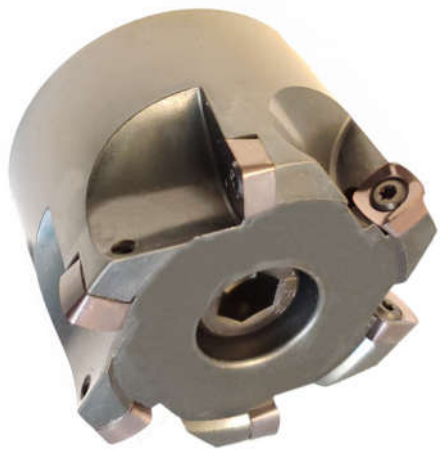

Tool Info.										
Tool #	Flutes	D	L	Bore	Key	Plunge "P"	Ramp	Insert	Screw	Wrench
HF-2000S	5	2.000	1.625	.750	.312	.031	3°			
HF-2500S	6	2.500	1.750	1.000	.375	.031	2°	ARP-33	538T	T-10
HF-3000S	7	3.000	1.750	1.000	.375	.031	1.5°			

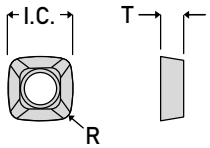

Insert Info.				
Insert #	I.C.	T	R	Grades
ARP-33	.375	.187	.062	D66 K11

Speed and Feed Info.			
Material	S.F.M.	*Minimum D.O.C. of .032 I.P.T.	**Maximum D.O.C. of .089 I.P.T.
Mild & Low Carbon Steel *Ex. 1018, 1020, 1117, 1141, 12L14*	1000 - 1400	.016 - .041	.010 - .025
High Carbon & Alloy Steel *Ex. 1045, 4140, 4340, 52100, 8620*	800 - 1000	.016 - .032	.010 - .020
Lower Carbon Tool Steel *Ex. P-20, H-13, S-7*	600 - 900	.016 - .032	.010 - .020
Tool Steel *Ex. A-2, A-6, D-2, M-2*	500 - 800	.016 - .032	.016 - .020
Stainless Steel *Ex. 304, 316, 420, 15-5PH, 17-4PH*	500 - 800	.016 - .032	.016 - .020
Iron *Ex. Cast, Ductile, Nodular*	800 - 1200	.016 - .041	.010 - .025
Nickel & Titanium Alloy *Ex. Inconel, Hastelloy, TI-6AL-4V*	350 - 450	.008 - .024	.005 - .015

** Minimum D.O.C. of .032" = 8X Chip Thinning Factor*

*** Maximum D.O.C. of .089" = 5X Chip Thinning Factor*

Octa Mills

45° Lead Angle
8/16 Cutting Edges Per Insert
Available in Shank Style or Shell Mount

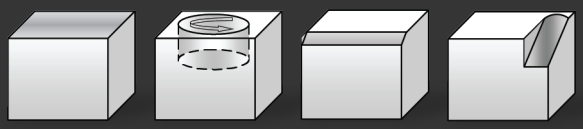

OC
Octa Mills

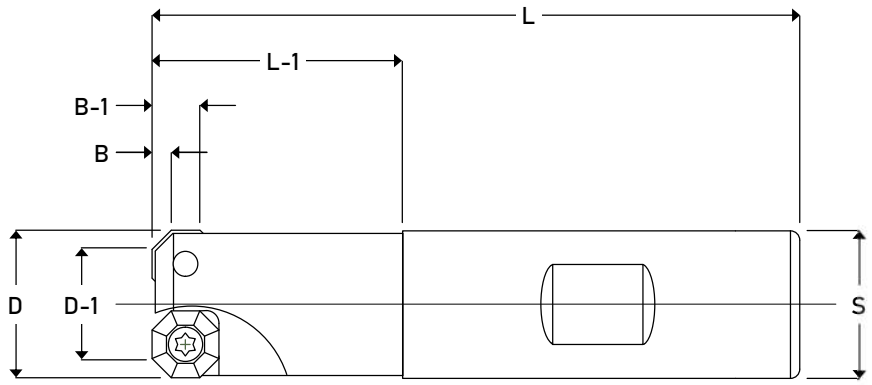

Tool Info.

Tool #	D	D-1	B	B-1	Flutes	L	L-1	S	Ramp	Insert
OC-500	.500	.310	.095	.220	1	3.000	1.000	.625	Drill*	ODEB-2711 RDEB-2711
OC-625	.625	.435	.095	.220	1	3.000	1.000	.625	Drill*	
OC-750	.750	.560	.095	.220	2	3.250	1.250	.750	25°	ODEB-2721 RDEB-2721
XOC-750	.750	.560	.095	.220	2	5.000	3.000	.750	25°	
OC-875	.875	.685	.095	.220	2	3.250	1.250	.750	15°	
OC-1000	1.000	.810	.095	.220	3	3.500	1.500	.750	10°	
XOC-1000	1.000	.810	.095	.220	3	6.250	4.000	1.000	10°	
OC-1250	1.250	1.062	.095	.220	3	3.500	1.500	.750	8°	
OC-1540	1.500	1.312	.095	.220	4	3.500	1.500	.750	6°	

*Applies to ODEB inserts only.

Octa Positive Top Inserts

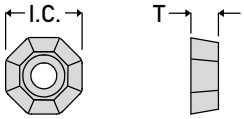

Insert Info.

Insert #	I.C.	T	Screw	Wrench	Grades
ODEB-2711	.343	.110	5625T	T-10	K11
ODEB-2721	.343	.130	5625T	T-10	B1M K11

Round Positive Top Inserts

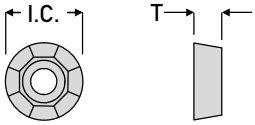

Insert Info.

Insert #	I.C.	T	Screw	Wrench	Grade
RDEB-2711	.343	.110	5625T	T-10	K11
RDEB-2721	.343	.130	5625T	T-10	

Speed and Feed Info.

Material	S.F.M.	.500 - .750 Dia. I.P.T.	.875 - 1.500 Dia. I.P.T.
Mild & Low Carbon Steel *Ex. 1018, 1020, 1117, 1141, 12L14*	800 - 1200	.002 - .005	.003 - .012
High Carbon & Alloy Steel *Ex. 1045, 4140, 4340, 52100, 8620*	500 - 800	.002 - .004	.003 - .010
Lower Carbon Tool Steel *Ex. P-20, H-13, S-7*	400 - 700	.002 - .004	.003 - .010
Tool Steel *Ex. A-2, A-6, D-2, M-2*	300 - 600	.002 - .004	.003 - .010
Stainless Steel *Ex. 304, 316, 420, 15-5PH, 17-4PH*	300 - 600	.002 - .003	.002 - .007
Iron *Ex. Cast, Ductile, Nodular*	600 - 1000	.003 - .006	.004 - .012
Nickel & Titanium Alloy *Ex. Inconel, Hastelloy, TI-6AL-4V*	120 - 180	.001 - .003	.001 - .004
Non-Ferrous Metal *Ex. Aluminum, Bronze, Brass*	1000 - 2500	.003 - .006	.004 - .014

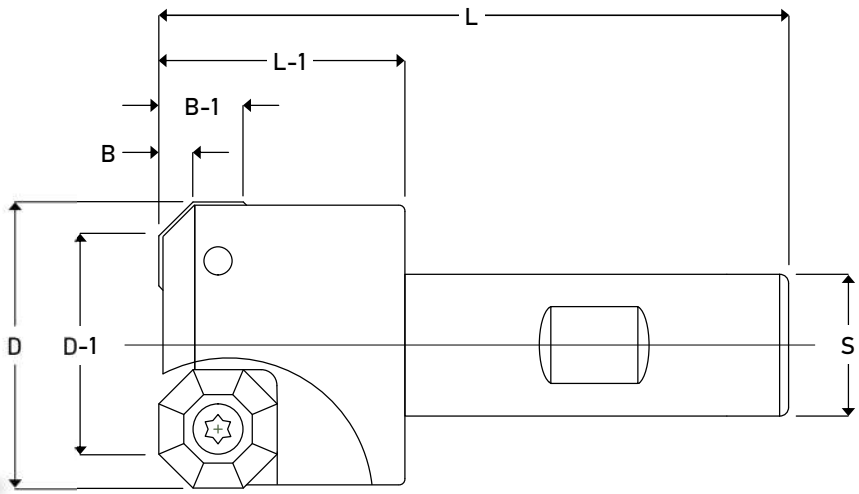

Tool Info.

Tool #	D	D-1	B	B-1	Flutes	L	L-1	S	Ramp	Insert
OC-1575	1.500	1.125	.160	.410	2	3.250	1.250	.750	20°	OPEB-535 RPEB-535
OC-1510	1.500	1.125	.160	.410	2	4.500	1.500	1.000	20°	
XOC-1500	1.500	1.125	.160	.410	2	8.250	6.000	1.250	20°	
OC-2075	2.000	1.625	.160	.410	3	3.250	1.250	.750	10°	
OC-2010	2.000	1.625	.160	.410	3	4.500	1.500	1.000	10°	

Octa Positive Top Inserts

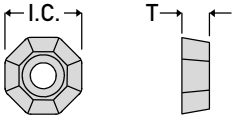

Insert Info.

Insert #	I.C.	T	Screw	Wrench	Grades
OPEB-535	.625	.220	838T	T-20	D66 K11
OPEB-535XP	.625	.220	838T	T-20	B1M K22

Round Positive Top Insert

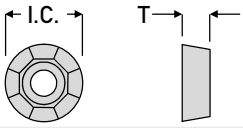

Insert Info.

Insert #	I.C.	T	Screw	Wrench	Grade
RPEB-535	.625	.220	838T	T-20	K22

Speed and Feed Info.

Material	S.F.M.	I.P.T.
Mild & Low Carbon Steel *Ex. 1018, 1020, 1117, 1141, 12L14*	800 - 1200	.003 - .012
High Carbon & Alloy Steel *Ex. 1045, 4140, 4340, 52100, 8620*	500 - 800	.003 - .010
Lower Carbon Tool Steel *Ex. P-20, H-13, S-7*	400 - 700	.003 - .010
Tool Steel *Ex. A-2, A-6, D-2, M-2*	300 - 600	.003 - .010
Stainless Steel *Ex. 304, 316, 420, 15-5PH, 17-4PH*	300 - 600	.002 - .007
Iron *Ex. Cast, Ductile, Nodular*	600 - 1000	.004 - .012
Nickel & Titanium Alloy *Ex. Inconel, Hastelloy, TI-6AL-4V*	120 - 180	.001 - .004
Non-Ferrous Metal *Ex. Aluminum, Bronze, Brass*	1000 - 2500	.004 - .014

OC

Octa Mills

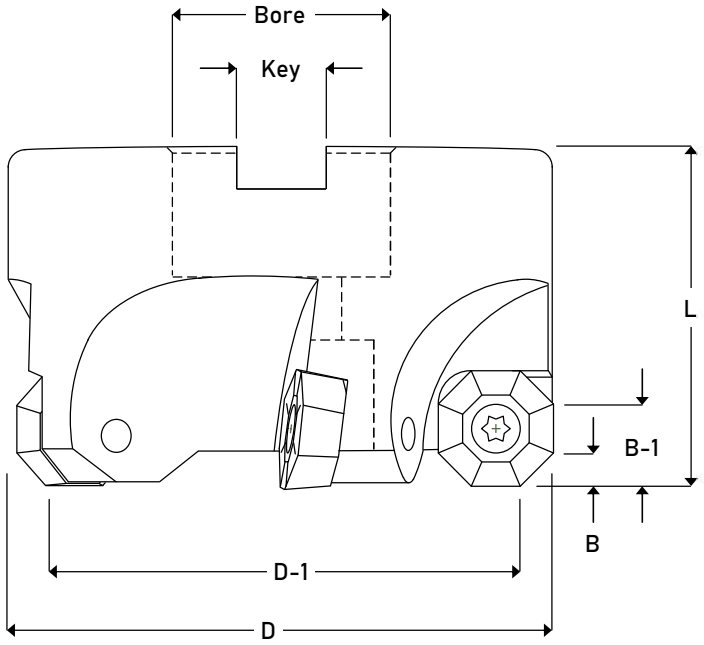

Tool Info.

Tool #	D	D-1	B	B-1	L	Flutes	Bore	Key	Ramp	Insert
OC-2000	2.000	1.625	.160	.410	1.750	3	.750	.312	10°	OPEB-535 RPEB-535
OC-2500	2.500	2.125	.160	.410	1.750	4	1.000	.375	7°	
OC-3000	3.000	2.625	.160	.410	1.750	5	1.000	.375	5°	
OC-4000	4.000	3.625	.160	.410	1.750	6	1.500	.625	3°	
OC-5000	5.000	4.625	.160	.410	1.750	6	1.500	.625	2°	
OC-6000	6.000	5.625	.160	.410	1.750	7	1.500	.625	1°	

For Larger Diameters, Refer to Universal Mills on Page 127

Octa Positive Top Inserts

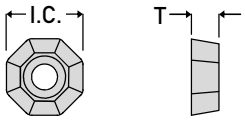

Insert Info.

Insert #	I.C.	T	Screw	Wrench	Grades
OPEB-535	.625	.220	838T	T-20	D66 K11
OPEB-535XP	.625	.220	838T	T-20	B1M K22

Round Positive Top Insert

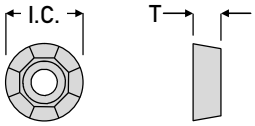

Insert Info.

Insert #	I.C.	T	Screw	Wrench	Grade
RPEB-535	.625	.220	838T	T-20	K11

Speed and Feed Info.

Material	S.F.M.	I.P.T.
Mild & Low Carbon Steel *Ex. 1018, 1020, 1117, 1141, 12L14*	800 - 1200	.003 - .012
High Carbon & Alloy Steel *Ex. 1045, 4140, 4340, 52100, 8620*	500 - 800	.003 - .010
Lower Carbon Tool Steel *Ex. P-20, H-13, S-7*	400 - 700	.003 - .010
Tool Steel *Ex. A-2, A-6, D-2, M-2*	300 - 600	.003 - .010
Stainless Steel *Ex. 304, 316, 420, 15-5PH, 17-4PH*	300 - 600	.002 - .007
Iron *Ex. Cast, Ductile, Nodular*	600 - 1000	.004 - .012
Nickel & Titanium Alloy *Ex. Inconel, Hastelloy, TI-6AL-4V*	120 - 180	.001 - .004
Non-Ferrous Metal *Ex. Aluminum, Bronze, Brass*	1000 - 2500	.004 - .014

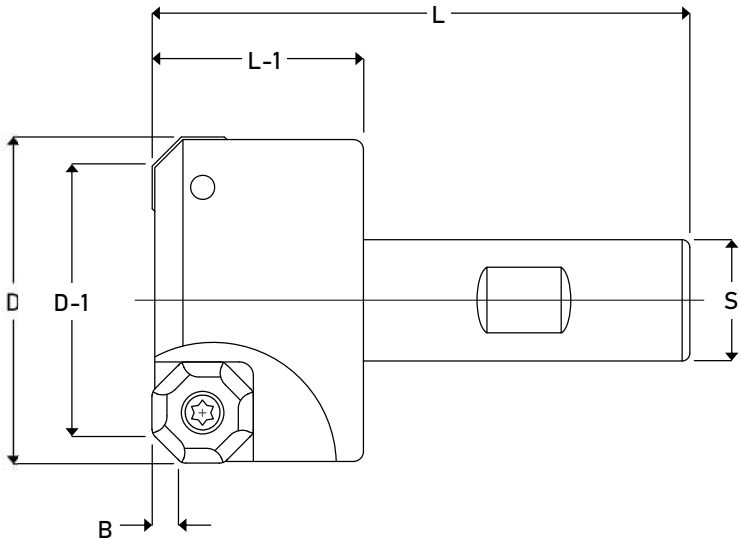

DOC

Dual Octa Mills

Tool Info.

Tool #	D	D-1	B	Flutes	L	L-1	S	Insert
DOC-1575	1.500	1.100	.150	2	3.250	1.250	.750	
DOC-2075	2.000	1.600	.150	4	3.250	1.250	.750	ONPG-4532
DOC-2010	2.000	1.600	.150	4	3.750	1.500	1.000	

Double Sided
16 Edges!

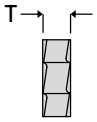

Insert Info.

Insert #	I.C.	T	Screw	Wrench	Grade
ONPG-4532	.593	.220	838T	T-20	K11

Speed and Feed Info.

Material	S.F.M.	I.P.T.
Mild & Low Carbon Steel *Ex. 1018, 1020, 1117, 1141, 12L14*	800 - 1200	.004 - .012
High Carbon & Alloy Steel *Ex. 1045, 4140, 4340, 52100, 8620*	500 - 800	.004 - .010
Lower Carbon Tool Steel *Ex. P-20, H-13, S-7*	400 - 700	.004 - .010
Tool Steel *Ex. A-2, A-6, D-2, M-2*	300 - 600	.004 - .010
Stainless Steel *Ex. 304, 316, 420, 15-5PH, 17-4PH*	300 - 600	.003 - .007
Iron *Ex. Cast, Ductile, Nodular*	600 - 1000	.005 - .012
Nickel & Titanium Alloy *Ex. Inconel, Hastelloy, TI-6AL-4V*	120 - 180	.002 - .004
Non-Ferrous Metal *Ex. Aluminum, Bronze, Brass*	1000 - 2500	.005 - .014

DOC

Dual Octa Mills

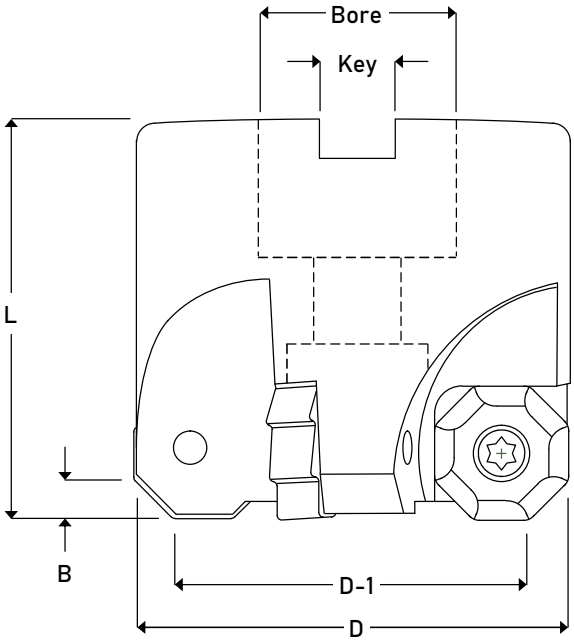

Tool Info.

Tool #	D	D-1	B	L	Flutes	Bore	Key	Insert
DOC-2000	2.000	1.600	.150	1.750	4	.750	.312	
DOC-3000	3.000	2.600	.150	1.750	5	1.000	.375	
DOC-4000	4.000	3.600	.150	1.750	7	1.500	.625	ONPG-4532
DOC-5000	5.000	4.600	.150	1.750	8	1.500	.625	
DOC-6000	6.000	5.600	.150	1.750	9	1.500	.625	

For Larger Diameters, Refer to Universal Mills on Page 127

Double Sided
16 Edges!

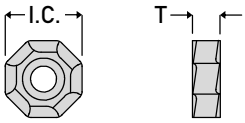

Insert Info.

Insert #	I.C.	T	Screw	Wrench	Grade
ONPG-4532	.593	.220	838T	T-20	K11

Speed and Feed Info.

Material	S.F.M.	I.P.T.
Mild & Low Carbon Steel *Ex. 1018, 1020, 1117, 1141, 12L14*	800 - 1200	.004 - .012
High Carbon & Alloy Steel *Ex. 1045, 4140, 4340, 52100, 8620*	500 - 800	.004 - .010
Lower Carbon Tool Steel *Ex. P-20, H-13, S-7*	400 - 700	.004 - .010
Tool Steel *Ex. A-2, A-6, D-2, M-2*	300 - 600	.004 - .010
Stainless Steel *Ex. 304, 316, 420, 15-5PH, 17-4PH*	300 - 600	.003 - .007
Iron *Ex. Cast, Ductile, Nodular*	600 - 1000	.005 - .012
Nickel & Titanium Alloy *Ex. Inconel, Hastelloy, TI-6AL-4V*	120 - 180	.002 - .004
Non-Ferrous Metal *Ex. Aluminum, Bronze, Brass*	1000 - 2500	.005 - .014

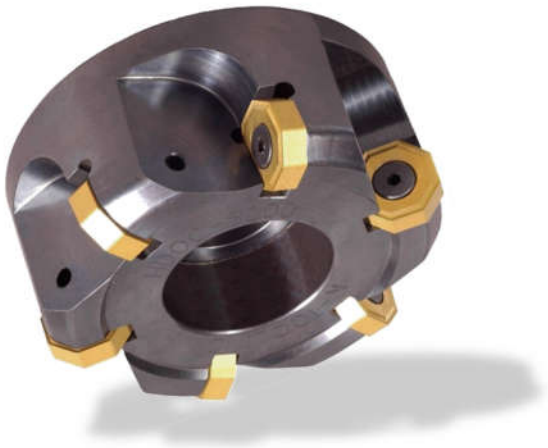

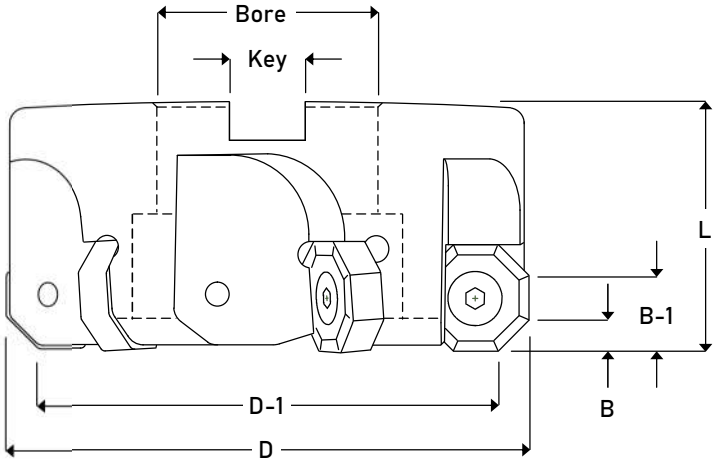

HDOC

Heavy Duty Octa Mills

Tool Info.

Tool #	D	D-1	B	B-1	L	Flutes	Bore	Key	Insert
HDOC-3000	3.000	2.400	.300	.700	2.000	4	1.000	.375	ONMB-85 RNEB-85P
HDOC-4000	4.000	3.400	.300	.700	2.250	5	1.500	.625	
HDOC-5000	5.000	4.400	.300	.700	2.250	6	1.500	.625	
HDOC-6000	6.000	5.400	.300	.700	2.250	7	1.500	.625	

Octa
Positive Top
(Double Sided)

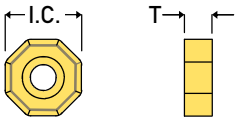

16 Edges!

Insert Info.

Insert #	I.C.	T	Screw	Wrench	Grade
ONMB-85	1.000	.312	1462T	T-532	K11

Round
Positive Top
(Single Sided)

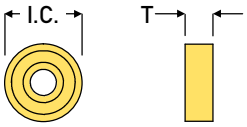

Insert Info.

Insert #	I.C.	T	Screw	Wrench	Grade
RNEB-85P	1.000	.312	1462T	T-532	K11

Round
Positive Top
(Double Sided)

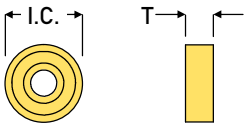

Insert Info.

Insert #	I.C.	T	Screw	Wrench	Grade
RNMB-85P	1.000	.312	1462T	T-532	K11

Speed and Feed Info.

Material	S.F.M.	I.P.T.
Mild & Low Carbon Steel *Ex. 1018, 1020, 1117, 1141, 12L14*	800 - 1200	.010 - .030
High Carbon & Alloy Steel *Ex. 1045, 4140, 4340, 52100, 8620*	500 - 800	.008 - .020
Lower Carbon Tool Steel *Ex. P-20, H-13, S-7*	400 - 700	.008 - .020
Tool Steel *Ex. A-2, A-6, D-2, M-2*	300 - 600	.008 - .020
Stainless Steel *Ex. 304, 316, 420, 15-5PH, 17-4PH*	300 - 600	.006 - .016
Iron *Ex. Cast, Ductile, Nodular*	600 - 1000	.010 - .030
Nickel & Titanium Alloy *Ex. Inconel, Hastelloy, TI-6AL-4V*	120 - 180	.004 - .008
Non-Ferrous Metal *Ex. Aluminum, Bronze, Brass*	1000 - 2500	.010 - .040

Chamfer Products

Multiple Angles - Long Edge Chamfers
Extended Lengths -Reverse Chamfers
Adjustable/Cartridge Style
Shank & Shell Mount Available

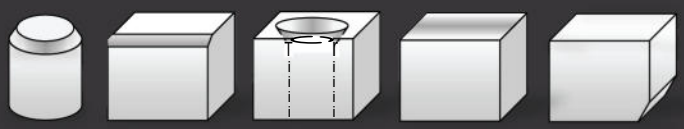

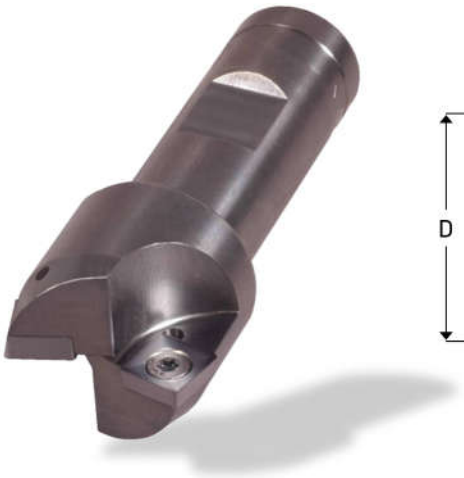

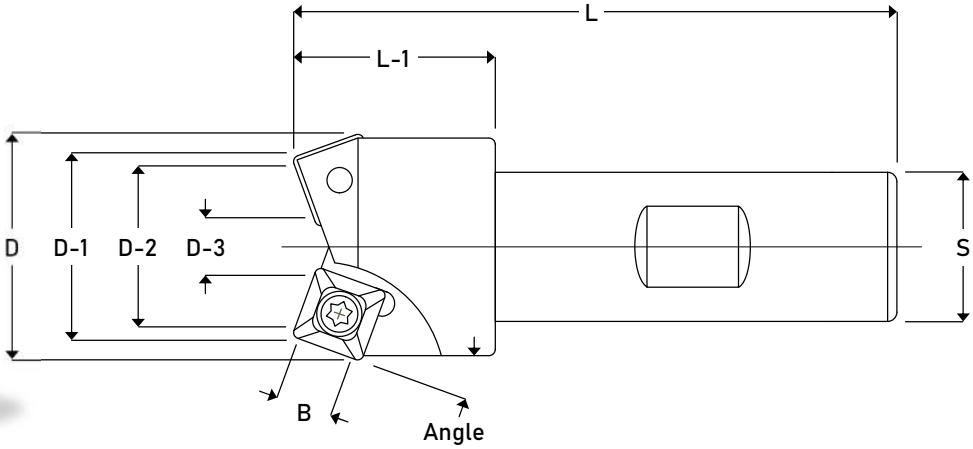

15° Chamfer Mills — Tool Info.

Tool #	Angle	Flutes	D	D-1	D-2	D-3	L	L-1	B	S	Insert	Screw	Wrench
A-5768	15°	2	.625	.560	N/A	N/A	2.500	.750	.156	.500	SPEB-1511CB	164T	T-6
A-5758	15°	2	1.125	.970	.875	.312	3.000	1.000	.312	.750	SPEB-322P	438T	T-10
A-5776	15°	2	1.625	1.410	1.300	.500	3.250	1.250	.438	.750	SPEB-432PA	638T	T-15
A-5762	15°	2	2.250	1.900	1.750	.500	3.750	1.500	.687	1.000	SPEB-6352PA	1012T	T-25

20° Chamfer Mills — Tool Info.

Tool #	Angle	Flutes	D	D-1	D-2	D-3	L	L-1	B	S	Insert	Screw	Wrench
A-5773	20°	2	.625	.525	N/A	N/A	2.500	.750	.156	.500	SPEB-1511CB	164T	T-6
A-5774	20°	2	1.125	.920	.812	.250	3.000	1.000	.312	.750	SPEB-322P	438T	T-10
A-5777	20°	2	1.625	1.340	1.220	.440	3.250	1.250	.438	.750	SPEB-432PA	638T	T-15
A-5775	20°	2	2.250	1.790	1.650	.438	3.750	1.500	.687	1.000	SPEB-6352PA	1012T	T-25

Chipbreaker Insert

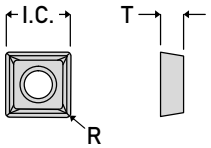

Insert Info.

Insert #	I.C.	T	R	Grades
SPEB-1511CB	.187	.082	.015	K11 K22

Positive Top Inserts

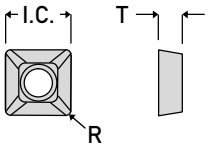

Insert Info.

Insert #	I.C.	T	R	Grades
SPEB-322P	.375	.125	.031	B1M D66 K11 K22
SPEB-432PA	.500	.187	.031	B1M D66 K11 K22
SPEB-6352PA	.750	.220	.031	D66 K11 K22

Speed and Feed Info.

Material	S.F.M.	.625 Dia. I.P.T.	1.125 - 2.250 Dia. I.P.T.
Mild & Low Carbon Steel *Ex. 1018, 1020, 1117, 1141, 12L14*	800 - 1200	.002 - .003	.003 - .007
High Carbon & Alloy Steel *Ex. 1045, 4140, 4340, 52100, 8620*	500 - 800	.002 - .003	.002 - .006
Lower Carbon Tool Steel *Ex. P-20, H-13, S-7*	400 - 700	.002 - .003	.002 - .006
Tool Steel *Ex. A-2, A-6, D-2, M-2*	300 - 600	.001 - .003	.002 - .006
Stainless Steel *Ex. 304, 316, 420, 15-5PH, 17-4PH*	300 - 600	.002 - .003	.002 - .006
Iron *Ex. Cast, Ductile, Nodular*	600 - 1000	.002 - .003	.004 - .008
Nickel & Titanium Alloy *Ex. Inconel, Hastelloy, TI-6AL-4V*	120 - 180	.001 - .002	.001 - .003
Non-Ferrous Metal *Ex. Aluminum, Bronze, Brass*	1000 - 2500	.002 - .003	.004 - .010

A

22.5° & 30° Chamfer Mills

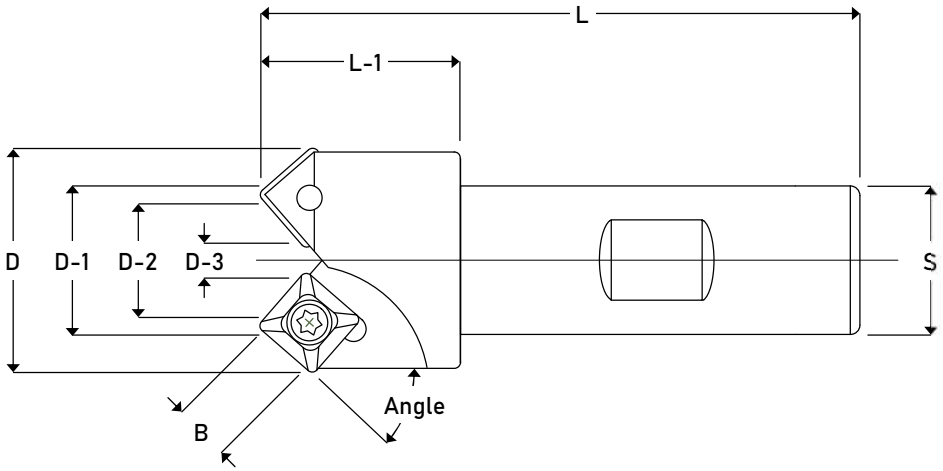

22.5° Chamfer Mills — Tool Info.

Tool #	Angle	Flutes	D	D-1	D-2	D-3	L	L-1	B	S	Insert	Screw	Wrench
A-2250	22.5°	2	1.625	1.300	1.190	.420	3.250	1.250	.438	.750	SPEB-432PA	638T	T-15
A-2275	22.5°	2	2.250	1.790	1.610	.375	3.750	1.500	.688	1.000	SPEB-6352PA	1012T	T-25

30° Chamfer Mills — Tool Info.

Tool #	Angle	Flutes	D	D-1	D-2	D-3	L	L-1	B	S	Insert	Screw	Wrench
A-5769	30°	2	.625	.485	N/A	N/A	2.500	.750	.156	.500	SPEB-1511CB	164T	T-6
A-5759	30°	2	1.125	.810	.700	.200	3.000	1.000	.312	.750	SPEB-322P	438T	T-10
A-5778	30°	2	1.625	1.200	1.080	.360	3.250	1.250	.438	.750	SPEB-432PA	638T	T-15
A-5763	30°	2	2.250	1.570	1.438	.312	3.750	1.500	.687	1.000	SPEB-6352PA	1012T	T-25

Chipbreaker Insert

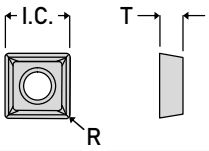

Insert Info.

Insert #	I.C.	T	R	Grades
SPEB-1511CB	.187	.082	.015	K111 K22

Positive Top Inserts

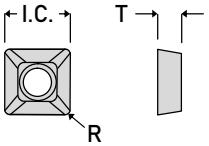

Insert Info.

Insert #	I.C.	T	R	Grades
SPEB-322P	.375	.125	.031	B1M D66 K11 K22
SPEB-432PA	.500	.187	.031	B1M D66 K11 K22
SPEB-6352PA	.750	.220	.031	D66 K11 K22

Speed and Feed Info.

Material	S.F.M.	.625 Dia. I.P.T.	1.125 - 2.250 Dia. I.P.T.
Mild & Low Carbon Steel *Ex. 1018, 1020, 1117, 1141, 12L14*	800 - 1200	.002 - .003	.003 - .007
High Carbon & Alloy Steel *Ex. 1045, 4140, 4340, 52100, 8620*	500 - 800	.002 - .003	.002 - .006
Lower Carbon Tool Steel *Ex. P-20, H-13, S-7*	400 - 700	.002 - .003	.002 - .006
Tool Steel *Ex. A-2, A-6, D-2, M-2*	300 - 600	.001 - .003	.002 - .006
Stainless Steel *Ex. 304, 316, 420, 15-5PH, 17-4PH*	300 - 600	.002 - .003	.002 - .006
Iron *Ex. Cast, Ductile, Nodular*	600 - 1000	.002 - .003	.004 - .008
Nickel & Titanium Alloy *Ex. Inconel, Hastelloy, TI-6AL-4V*	120 - 180	.001 - .002	.001 - .003
Non-Ferrous Metal *Ex. Aluminum, Bronze, Brass*	1000 - 2500	.002 - .003	.004 - .010

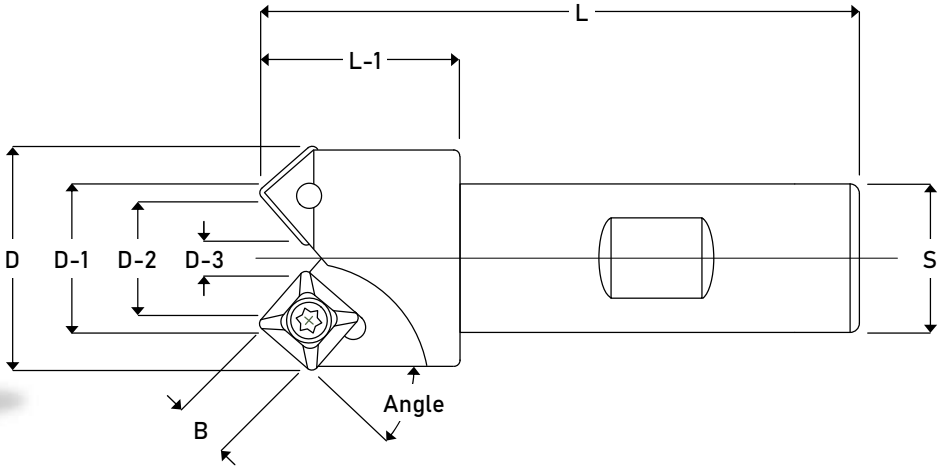

A

37.5° & 41° Chamfer Mills

37.5° Chamfer Mills — Tool Info.

Tool #	Angle	Flutes	D	D-1	D-2	D-3	L	L-1	B	S	Insert	Screw	Wrench
A-3750	37.5°	2	1.625	1.090	.980	.320	3.250	1.250	.438	.750	SPEB-432PA	638T	T-15
A-3775	37.5°	2	2.250	1.420	1.300	.250	3.750	1.500	.688	1.000	SPEB-6352PA	1012T	T-25

41° Chamfer Mills — Tool Info.

Tool #	Angle	Flutes	D	D-1	D-2	D-3	L	L-1	B	S	Insert	Screw	Wrench
A-5772	41°	2	.625	.430	N/A	N/A	2.500	.750	.156	.500	SPEB-1511CB	164T	T-6
A-5766	41°	2	1.125	.710	.580	.160	3.000	1.000	.312	.750	SPEB-322P	438T	T-10
A-5779	41°	2	1.625	1.050	.930	.312	3.250	1.250	.438	.750	SPEB-432PA	638T	T-15
A-5767	41°	2	2.250	1.350	1.188	.250	3.750	1.500	.687	1.000	SPEB-6352PA	1012T	T-25

Chipbreaker Insert

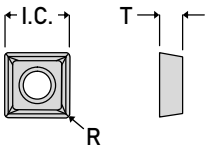

Insert Info.

Insert #	I.C.	T	R	Grades
SPEB-1511CB	.187	.082	.015	K11 K22

Positive Top Inserts

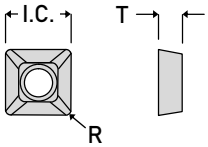

Insert Info.

Insert #	I.C.	T	R	Grades
SPEB-322P	.375	.125	.031	B1M D66 K11 K22
SPEB-432PA	.500	.187	.031	B1M D66 K11 K22
SPEB-6352PA	.750	.220	.031	D66 K11 K22

Speed and Feed Info.

Material	S.F.M.	.625 Dia. I.P.T.	1.125 - 2.250 Dia. I.P.T.
Mild & Low Carbon Steel *Ex. 1018, 1020, 1117, 1141, 12L14*	800 - 1200	.002 - .003	.003 - .007
High Carbon & Alloy Steel *Ex. 1045, 4140, 4340, 52100, 8620*	500 - 800	.002 - .003	.002 - .006
Lower Carbon Tool Steel *Ex. P-20, H-13, S-7*	400 - 700	.002 - .003	.002 - .006
Tool Steel *Ex. A-2, A-6, D-2, M-2*	300 - 600	.001 - .003	.002 - .006
Stainless Steel *Ex. 304, 316, 420, 15-5PH, 17-4PH*	300 - 600	.002 - .003	.002 - .006
Iron *Ex. Cast, Ductile, Nodular*	600 - 1000	.002 - .003	.004 - .008
Nickel & Titanium Alloy *Ex. Inconel, Hastelloy, TI-6AL-4V*	120 - 180	.001 - .002	.001 - .003
Non-Ferrous Metal *Ex. Aluminum, Bronze, Brass*	1000 - 2500	.002 - .003	.004 - .010

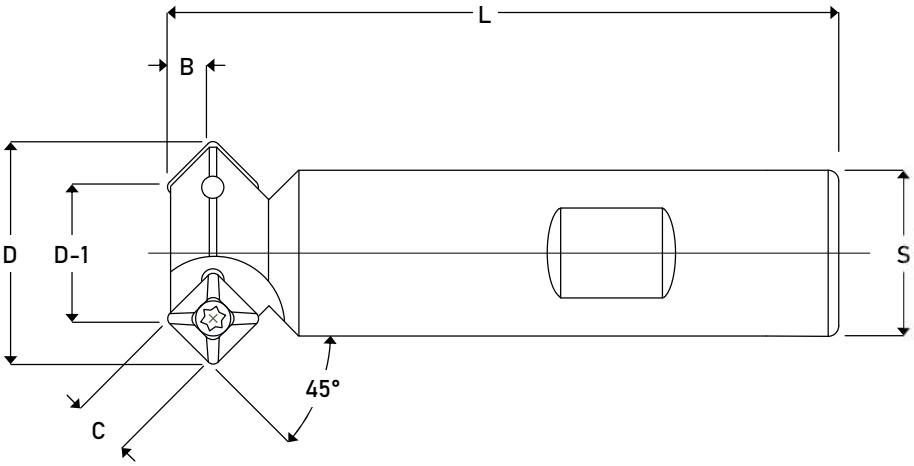

45° Chamfer Mills					*Tool Info.*					
Tool #	Flutes	D	D-1	L	B	C	S	Insert	Screw	Wrench
A-2399	1	.500	.285	2.875	.110	.156	.500	SPEB-1511CB	164T	T-6
A-2199	1	.625	.320	2.500	.155	.218	.500	SDEB-2151P	300T	T-8
A-2299	2	.625	.410	2.875	.110	.156	.500	SPEB-1511CB	164T	T-6
A-0810	1	.810	.352	3.000	.220	.312	.750	SPEB-322P	438T	T-10
A-1383	1	1.000	.540	3.000	.220	.312	.750	SPEB-322P	438T	T-10
A-1383-2	2	1.000	.630	3.000	.176	.250	.750	SPEB-2522P	314T	T-8
A-1383XL	2	1.000	.630	6.000	.176	.250	.750	SPEB-2522P	314T	T-8
A-1383MF	4	1.000	.810	3.250	.088	.125	.750	SPEB-1512CB	164T	T-6

Chipbreaker Inserts

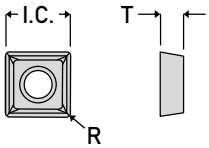

Insert Info.

Insert #	I.C.	T	R	Grades
SPEB-1511CB	.187	.082	.015	K11 K22
SPEB-1512CB	.187	.082	.031	K11 K22

Positive Top Inserts

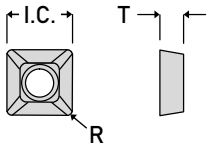

Insert Info.

Insert #	I.C.	T	R	Grades
SDEB-2151P	.250	.125	.015	K11
SPEB-2522P	.312	.125	.031	B1M D66 K11 K22
SPEB-322P	.375	.125	.031	B1M D66 K11 K22

Speed and Feed Info.

Material	S.F.M.	.500 - .625 Dia. I.P.T.	1.000 Dia. I.P.T.
Mild & Low Carbon Steel *Ex. 1018, 1020, 1117, 1141, 12L14*	800 - 1200	.002 - .003	.003 - .007
High Carbon & Alloy Steel *Ex. 1045, 4140, 4340, 52100, 8620*	500 - 800	.002 - .003	.002 - .006
Lower Carbon Tool Steel *Ex. P-20, H-13, S-7*	400 - 700	.002 - .003	.002 - .006
Tool Steel *Ex. A-2, A-6, D-2, M-2*	300 - 600	.001 - .003	.002 - .006
Stainless Steel *Ex. 304, 316, 420, 15-5PH, 17-4PH*	300 - 600	.002 - .003	.002 - .006
Iron *Ex. Cast, Ductile, Nodular*	600 - 1000	.002 - .003	.004 - .008
Nickel & Titanium Alloy *Ex. Inconel, Hastelloy, TI-6AL-4V*	120 - 180	.001 - .002	.001 - .003
Non-Ferrous Metal *Ex. Aluminum, Bronze, Brass*	1000 - 2500	.002 - .003	.004 - .010

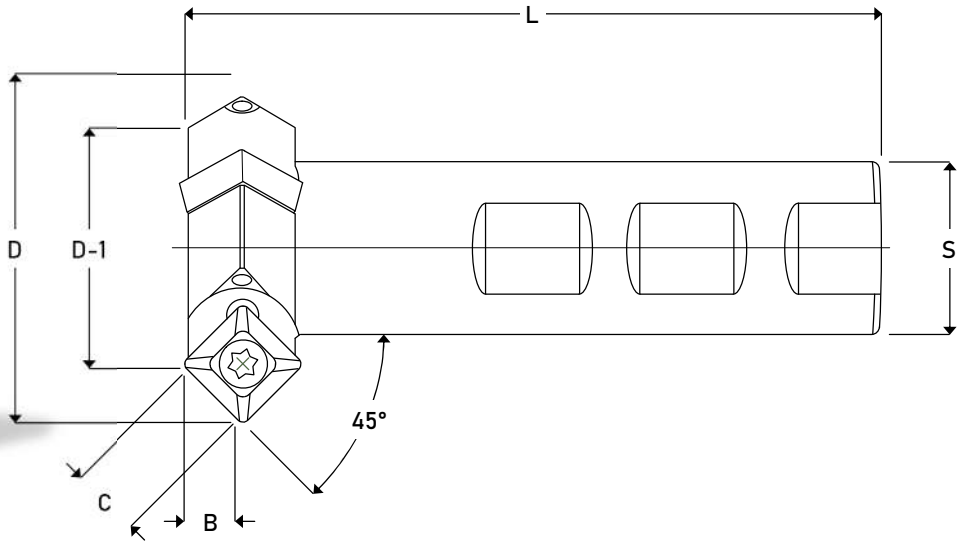

45° Chamfer Mills — *Tool Info.*

Tool #	Flutes	D	D-1	L	B	C	S	Insert	Screw	Wrench
A-1384	2	1.250	.790	4.000	.220	.312	.750	SPEB-322P	438T	T-10
A-1384XL	2	1.250	.790	6.000	.220	.312	.750	SPEB-322P	438T	T-10
A-1384MF	4	1.250	.970	3.500	.132	.188	.750	SPEB-222P	314T	T-8
A-1390	3	1.375	.920	4.000	.220	.312	.750	SPEB-322P	438T	T-10
A-1385	3	1.500	1.045	4.000	.220	.312	.750	SPEB-322P	438T	T-10
A-1385XL	3	1.500	1.045	6.000	.220	.312	.750	SPEB-322P	438T	T-10
A-1385MF	4	1.500	1.220	3.500	.132	.188	.750	SPEB-222P	314T	T-8
A-1391	3	1.750	1.120	4.000	.309	.437	1.000	SPEB-432PA	638T	T-15
A-1386	3	2.000	1.370	4.000	.309	.437	1.000	SPEB-432PA	638T	T-15
A-1386XL	3	2.000	1.370	6.000	.309	.437	1.000	SPEB-432PA	638T	T-15
A-1386MF	5	2.000	1.635	3.750	.176	.250	1.000	SPEB-2522P	314T	T-8
A-1389	3	2.250	1.450	4.250	.396	.563	1.000	SPEB-532PA	838T	T-20
A-1387	3	2.500	1.510	4.500	.486	.687	1.250	SPEB-6352PA	1012T	T-25
A-1392	3	3.000	2.020	4.500	.486	.687	1.250	SPEB-6352PA	1012T	T-25
A-1388	3	3.500	2.160	5.000	.663	.937	1.500	SPEB-842PA	1412T	T-532

Positive Top Inserts

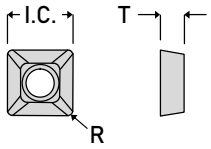

Insert Info.

Insert #	I.C.	T	R	Grades
SPEB-222P	.250	.125	.031	B1M D66 K11 K22
SPEB-2522P	.312	.125	.031	B1M D66 K11 K22
SPEB-322P	.375	.125	.031	B1M D66 K11 K22
SPEB-432PA	.500	.187	.031	B1M D66 K11 K22
SPEB-6352PA	.750	.220	.031	D66 K11 K22
SPEB-842PA	1.000	.250	.031	K11

Speed and Feed Info.

Material	S.F.M.	I.P.T.
Mild & Low Carbon Steel *Ex. 1018, 1020, 1117, 1141, 12L14*	800 - 1200	.003 - .007
High Carbon & Alloy Steel *Ex. 1045, 4140, 4340, 52100, 8620*	500 - 800	.002 - .006
Lower Carbon Tool Steel *Ex. P-20, H-13, S-7*	400 - 700	.002 - .006
Tool Steel *Ex. A-2, A-6, D-2, M-2*	300 - 600	.002 - .006
Stainless Steel *Ex. 304, 316, 420, 15-5PH, 17-4PH*	300 - 600	.002 - .006
Iron *Ex. Cast, Ductile, Nodular*	600 - 1000	.004 - .008
Nickel & Titanium Alloy *Ex. Inconel, Hastelloy, TI-6AL-4V*	120 - 180	.001 - .003
Non-Ferrous Metal *Ex. Aluminum, Bronze, Brass*	1000 - 2500	.004 - .010

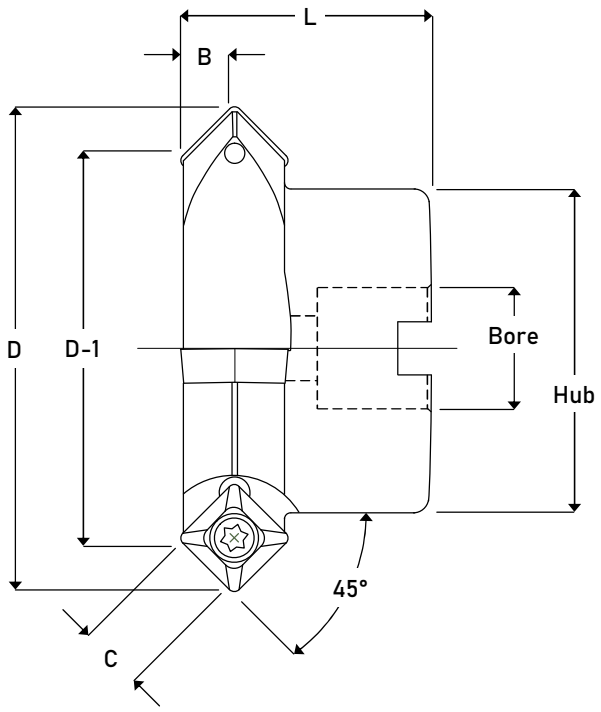

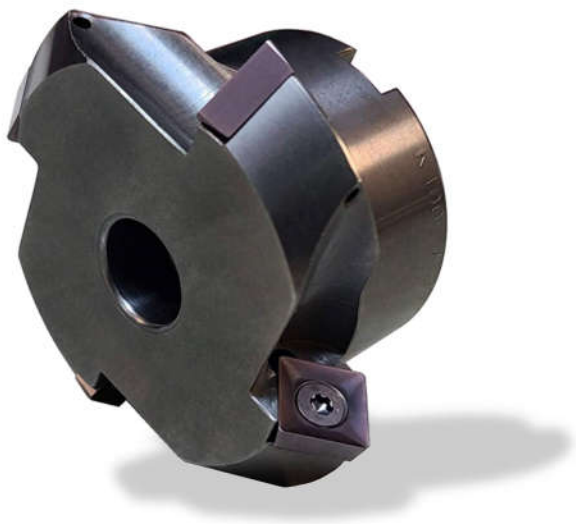

45° Shell Mills — *Tool Info.*

Tool #	Flutes	D	D-1	L	B	C	Bore	Key	Hub	Insert	Screw	Wrench
A-2000S	4	2.000	1.550	1.250	.220	.312	.500	.250	1.375	SPEB-332P	538T	T-10
A-3000S	4	3.000	2.375	1.500	.309	.437	.750	.312	2.000	SPEB-432PA	638T	T-15
A-4000S	4	4.000	3.030	1.625	.486	.687	1.000	.375	2.375	SPEB-6352PA	1012T	T-25

Positive Top Inserts

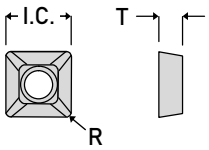

Insert Info.

Insert #	I.C.	T	R	Grades
SPEB-332P	.375	.187	.031	B1M D66 K11 K22
SPEB-432PA	.500	.187	.031	B1M D66 K11 K22
SPEB-6352PA	.750	.220	.031	D66 K11 K22

Speed and Feed Info.

Material	S.F.M.	I.P.T.
Mild & Low Carbon Steel *Ex. 1018, 1020, 1117, 1141, 12L14*	800 - 1200	.003 - .007
High Carbon & Alloy Steel *Ex. 1045, 4140, 4340, 52100, 8620*	500 - 800	.002 - .006
Lower Carbon Tool Steel *Ex. P-20, H-13, S-7*	400 - 700	.002 - .006
Tool Steel *Ex. A-2, A-6, D-2, M-2*	300 - 600	.002 - .006
Stainless Steel *Ex. 304, 316, 420, 15-5PH, 17-4PH*	300 - 600	.002 - .006
Iron *Ex. Cast, Ductile, Nodular*	600 - 1000	.004 - .008
Nickel & Titanium Alloy *Ex. Inconel, Hastelloy, TI-6AL-4V*	120 - 180	.001 - .003
Non-Ferrous Metal *Ex. Aluminum, Bronze, Brass*	1000 - 2500	.004 - .010

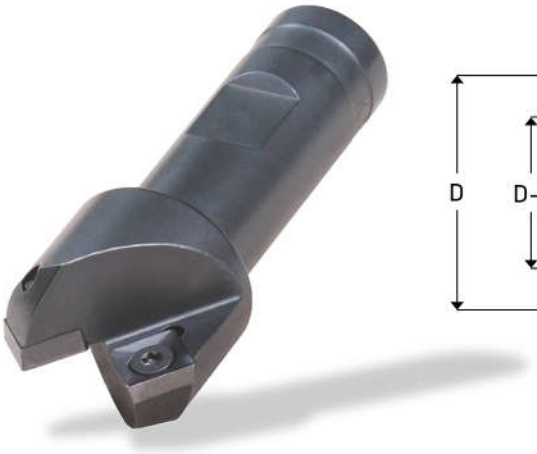

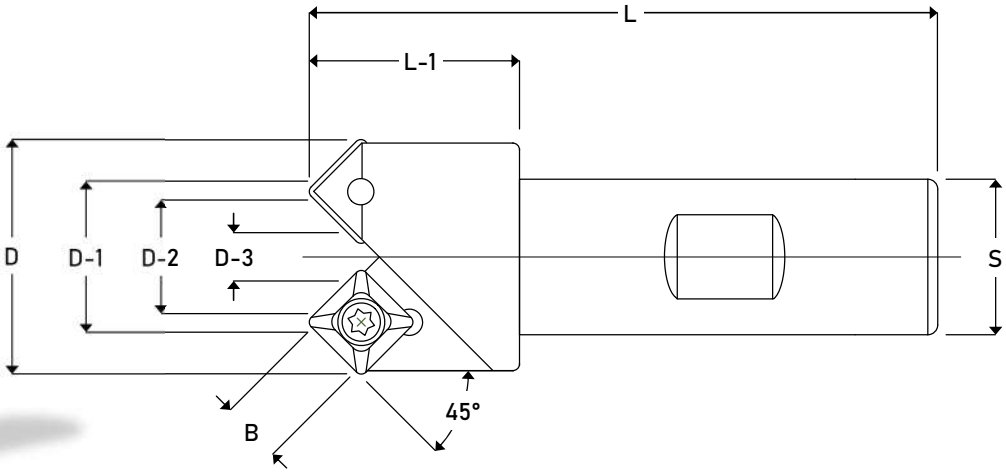

45° Chamfer Mills — *Tool Info.*

Tool #	Flutes	D	D-1	D-2	D-3	L	L-1	B	S	Insert	Screw	Wrench
OD-0545	2	1.125	.680	.550	.160	3.000	1.000	.312	.750	SPEB-322P	438T	T-10
OD-1245	2	2.187	1.400	1.250	.550	3.750	1.500	.563	1.000	SPEB-532PA	838T	T-20

Positive Top Inserts

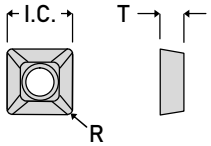

Insert Info.

Insert #	I.C.	T	R	Grades
SPEB-322P	.375	.125	.031	B1M D66 K11 K22
SPEB-532PA	.625	.187	.031	D66 K11 K22

Speed and Feed Info.

Material	S.F.M.	I.P.T.
Mild & Low Carbon Steel *Ex. 1018, 1020, 1117, 1141, 12L14*	800 - 1200	.003 - .007
High Carbon & Alloy Steel *Ex. 1045, 4140, 4340, 52100, 8620*	500 - 800	.002 - .006
Lower Carbon Tool Steel *Ex. P-20, H-13, S-7*	400 - 700	.002 - .006
Tool Steel *Ex. A-2, A-6, D-2, M-2*	300 - 600	.002 - .006
Stainless Steel *Ex. 304, 316, 420, 15-5PH, 17-4PH*	300 - 600	.002 - .006
Iron *Ex. Cast, Ductile, Nodular*	600 - 1000	.004 - .008
Nickel & Titanium Alloy *Ex. Inconel, Hastelloy, TI-6AL-4V*	120 - 180	.001 - .003
Non-Ferrous Metal *Ex. Aluminum, Bronze, Brass*	1000 - 2500	.004 - .010

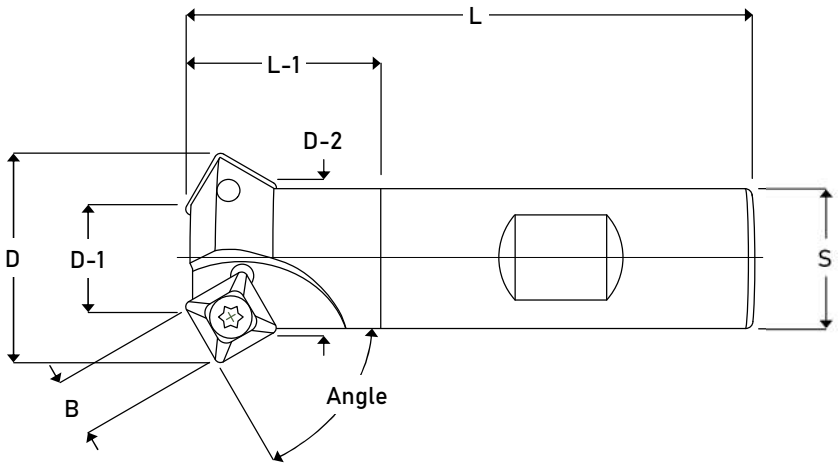

60° Chamfer Mills — *Tool Info.*

Tool #	Angle	Flutes	D	D-1	D-2	L	L-1	B	S	Insert	Screw	Wrench
A-5771	60°	2	.625	.350	.480	2.500	.750	.156	.500	SPEB-1511CB	164T	T-6
A-5761	60°	2	1.125	.560	.820	3.000	1.000	.312	.750	SPEB-322P	438T	T-10
A-5780	60°	2	1.625	.860	1.190	3.250	1.250	.438	.750	SPEB-432PA	638T	T-15
A-5765	60°	2	2.250	1.040	1.570	3.750	1.500	.687	1.000	SPEB-6352PA	1012T	T-25

67.5° Chamfer Mills — *Tool Info.*

Tool #	Angle	Flutes	D	D-1	D-2	L	L-1	B	S	Insert	Screw	Wrench
A-6750	67.5°	2	1.625	.790	1.300	3.250	1.250	.438	.750	SPEB-432PA	638T	T-15
A-6775	67.5°	2	2.250	.960	1.750	3.750	1.500	.687	1.000	SPEB-6352PA	1012T	T-25

Chipbreaker Insert

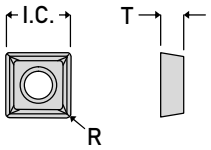

Insert Info.

Insert #	I.C.	T	R	Grades
SPEB-1511CB	.187	.082	.015	K11 K22

Positive Top Inserts

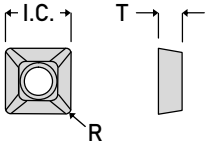

Insert Info.

Insert #	I.C.	T	R	Grades
SPEB-322P	.375	.125	.031	B1M D66 K11 K22
SPEB-432PA	.500	.187	.031	B1M D66 K11 K22
SPEB-6352PA	.750	.220	.031	D66 K11 K22

Speed and Feed Info.

Material	S.F.M.	.625 Dia. I.P.T.	1.125 - 2.250 Dia. I.P.T.
Mild & Low Carbon Steel *Ex. 1018, 1020, 1117, 1141, 12L14*	800 - 1200	.002 - .003	.003 - .007
High Carbon & Alloy Steel *Ex. 1045, 4140, 4340, 52100, 8620*	500 - 800	.002 - .003	.002 - .006
Lower Carbon Tool Steel *Ex. P-20, H-13, S-7*	400 - 700	.002 - .003	.002 - .006
Tool Steel *Ex. A-2, A-6, D-2, M-2*	300 - 600	.001 - .003	.002 - .006
Stainless Steel *Ex. 304, 316, 420, 15-5PH, 17-4PH*	300 - 600	.002 - .003	.002 - .006
Iron *Ex. Cast, Ductile, Nodular*	600 - 1000	.002 - .003	.004 - .008
Nickel & Titanium Alloy *Ex. Inconel, Hastelloy, TI-6AL-4V*	120 - 180	.001 - .002	.001 - .003
Non-Ferrous Metal *Ex. Aluminum, Bronze, Brass*	1000 - 2500	.002 - .003	.004 - .010

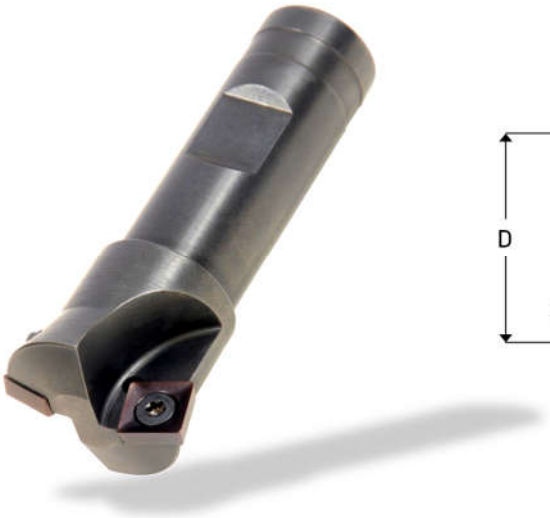

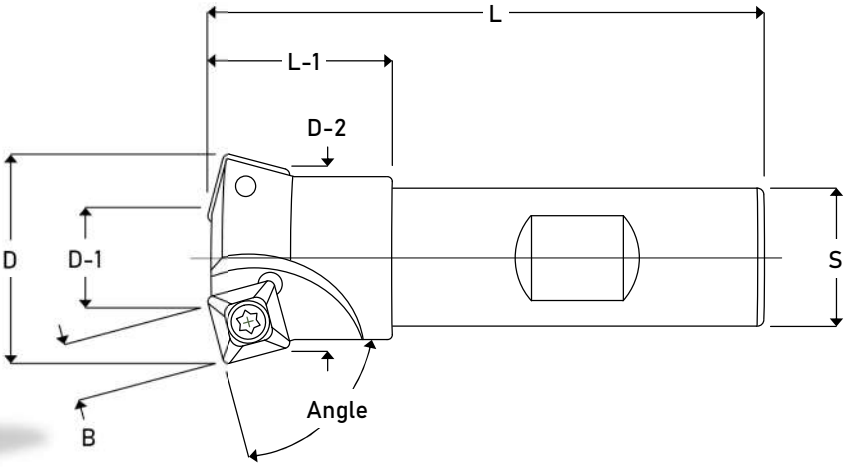

70° Chamfer Mills — Tool Info.

Tool #	Angle	Flutes	D	D-1	D-2	L	L-1	B	S	Insert	Screw	Wrench
A-5782	70°	2	.625	.320	.530	2.500	.750	.156	.500	SPEB-1511CB	164T	T-6
A-5783	70°	2	1.125	.510	.930	3.000	1.000	.312	.750	SPEB-322P	438T	T-10
A-5784	70°	2	1.625	.780	1.330	3.250	1.250	.438	.750	SPEB-432PA	638T	T-15
A-5785	70°	2	2.250	.930	1.790	3.750	1.500	.687	1.000	SPEB-6352PA	1012T	T-25

75° Chamfer Mills — Tool Info.

Tool #	Angle	Flutes	D	D-1	D-2	L	L-1	B	S	Insert	Screw	Wrench
A-5770	75°	2	.625	.320	.550	2.500	.750	.156	.500	SPEB-1511CB	164T	T-6
A-5760	75°	2	1.125	.480	.970	3.000	1.000	.312	.750	SPEB-322P	438T	T-10
A-5781	75°	2	1.625	.750	1.420	3.250	1.250	.438	.750	SPEB-432PA	638T	T-15
A-5764	75°	2	2.250	.880	1.900	3.750	1.500	.687	1.000	SPEB-6352PA	1012T	T-25

Chipbreaker Insert

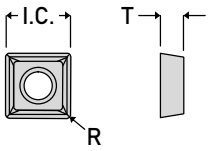

Insert Info.

Insert #	I.C.	T	R	Grades
SPEB-1511CB	.187	.082	.015	K11 K22

Positive Top Inserts

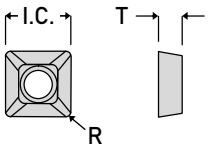

Insert Info.

Insert #	I.C.	T	R	Grades
SPEB-322P	.375	.125	.031	B1M D66 K11 K22
SPEB-432PA	.500	.187	.031	B1M D66 K11 K22
SPEB-6352PA	.750	.220	.031	D66 K11 K22

Speed and Feed Info.

Material	S.F.M.	.625 Dia. I.P.T.	1.125 - 2.250 Dia. I.P.T.
Mild & Low Carbon Steel *Ex. 1018, 1020, 1117, 1141, 12L14*	800 - 1200	.002 - .003	.003 - .007
High Carbon & Alloy Steel *Ex. 1045, 4140, 4340, 52100, 8620*	500 - 800	.002 - .003	.002 - .006
Lower Carbon Tool Steel *Ex. P-20, H-13, S-7*	400 - 700	.002 - .003	.002 - .006
Tool Steel *Ex. A-2, A-6, D-2, M-2*	300 - 600	.001 - .003	.002 - .006
Stainless Steel *Ex. 304, 316, 420, 15-5PH, 17-4PH*	300 - 600	.002 - .003	.002 - .006
Iron *Ex. Cast, Ductile, Nodular*	600 - 1000	.002 - .003	.004 - .008
Nickel & Titanium Alloy *Ex. Inconel, Hastelloy, TI-6AL-4V*	120 - 180	.001 - .002	.001 - .003
Non-Ferrous Metal *Ex. Aluminum, Bronze, Brass*	1000 - 2500	.002 - .003	.004 - .010

CC

Long Edge Chamfer Mills

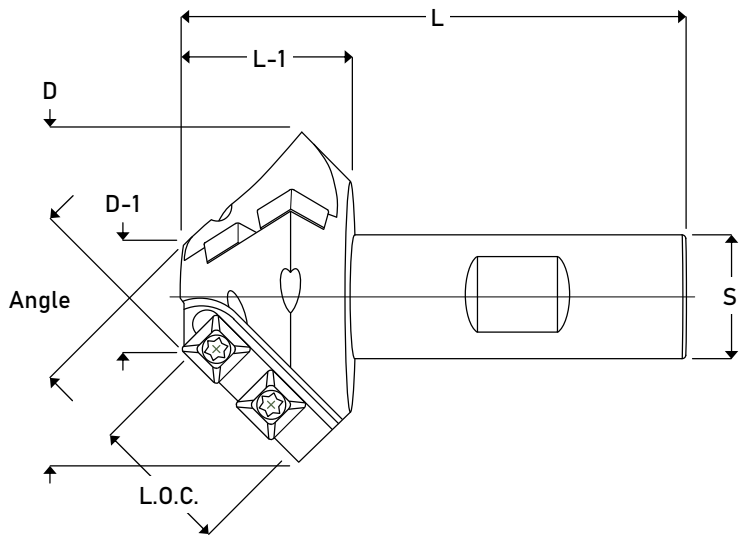

Shank Tools					Tool Info.							
Tool #	Angle	Flutes	Inserts	D	D-1	L	L-1	L.O.C.	S	Insert	Screw	Wrench
CC-40	40°	4-2 Effective	8	2.030	1.386	3.125	1.125	.900	.750			
CC-60	60°	4-2 Effective	8	2.030	1.090	3.062	1.062	.900	.750			
CC-82	82°	3-1 Effective	6	2.030	.775	3.000	1.000	.900	.750	SPEB-2522P	314T	T-8
CC-90	90°	3-1 Effective	6	2.030	.660	3.000	1.000	.900	.750			
CC-120	120°	2-1 Effective	4	2.030	.390	3.000	1.000	.900	.750			

Positive Top Insert

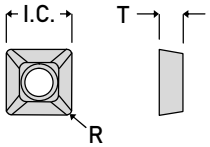

Insert Info.

Insert #	I.C.	T	R	Grades
SPEB-2522P	.312	.125	.031	B1M D66 K11 K22

Speed and Feed Info.

Material	S.F.M.	I.P.T.
Mild & Low Carbon Steel *Ex. 1018, 1020, 1117, 1141, 12L14*	800 - 1200	.003 - .007
High Carbon & Alloy Steel *Ex. 1045, 4140, 4340, 52100, 8620*	500 - 800	.002 - .006
Lower Carbon Tool Steel *Ex. P-20, H-13, S-7*	400 - 700	.002 - .006
Tool Steel *Ex. A-2, A-6, D-2, M-2*	300 - 600	.002 - .006
Stainless Steel *Ex. 304, 316, 420, 15-5PH, 17-4PH*	300 - 600	.002 - .006
Iron *Ex. Cast, Ductile, Nodular*	600 - 1000	.004 - .008
Nickel & Titanium Alloy *Ex. Inconel, Hastelloy, TI-6AL-4V*	120 - 180	.001 - .003
Non-Ferrous Metal *Ex. Aluminum, Bronze, Brass*	1000 - 2500	.004 - .010

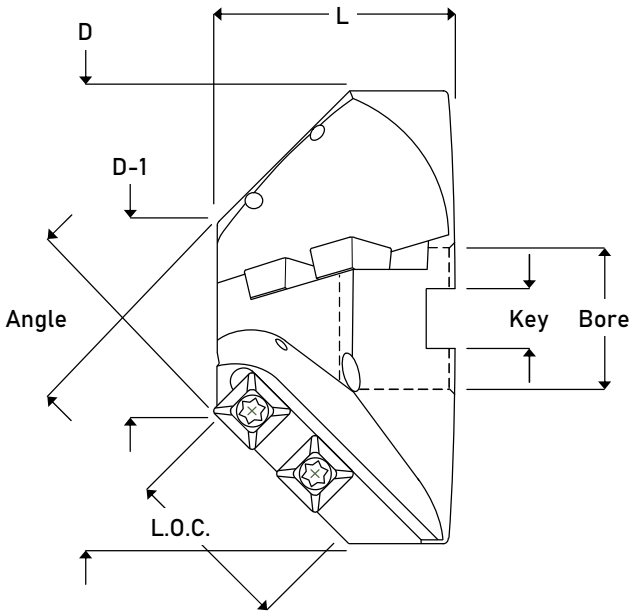

Shell Mills — *Tool Info.*

Tool #	Angle	Flutes	Inserts	D	D-1	L	L.O.C.	Bore	Key	Insert	Screw	Wrench
CCS-601	60°	4-2 Effective	8	3.000	1.840	1.625	1.130	1.000	.375	SPEB-332P	538T	T-10
CCS-602	60°	4-2 Effective	14	4.000	1.970	2.250	2.000	1.250	.500			
CCS-821	82°	4-2 Effective	8	3.250	1.718	1.625	1.130	1.000	.375			
CCS-822	82°	4-2 Effective	14	4.500	1.750	2.000	2.000	1.250	.500			
CCS-901	90°	4-2 Effective	8	2.985	1.250	1.500	1.130	.750	.312			
CCS-902	90°	4-2 Effective	14	4.720	1.750	2.000	2.000	1.250	.500			
CCS-1201	120°	4-2 Effective	8	3.625	1.580	1.625	1.130	1.000	.375			
CCS-1202	120°	4-2 Effective	14	5.375	1.820	2.000	2.000	1.250	.500			

Positive Top Insert

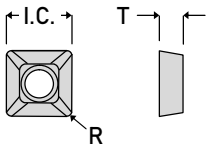

Insert Info.

Insert #	I.C.	T	R	Grades
SPEB-332P	.375	.187	.031	B1M D66 K11 K22

Speed and Feed Info.

Material	S.F.M.	I.P.T.
Mild & Low Carbon Steel *Ex. 1018, 1020, 1117, 1141, 12L14*	800 - 1200	.003 - .007
High Carbon & Alloy Steel *Ex. 1045, 4140, 4340, 52100, 8620*	500 - 800	.002 - .006
Lower Carbon Tool Steel *Ex. P-20, H-13, S-7*	400 - 700	.002 - .006
Tool Steel *Ex. A-2, A-6, D-2, M-2*	300 - 600	.002 - .006
Stainless Steel *Ex. 304, 316, 420, 15-5PH, 17-4PH*	300 - 600	.002 - .006
Iron *Ex. Cast, Ductile, Nodular*	600 - 1000	.004 - .008
Nickel & Titanium Alloy *Ex. Inconel, Hastelloy, TI-6AL-4V*	120 - 180	.001 - .003
Non-Ferrous Metal *Ex. Aluminum, Bronze, Brass*	1000 - 2500	.004 - .010

CMR

Chamfer Mills Reversed

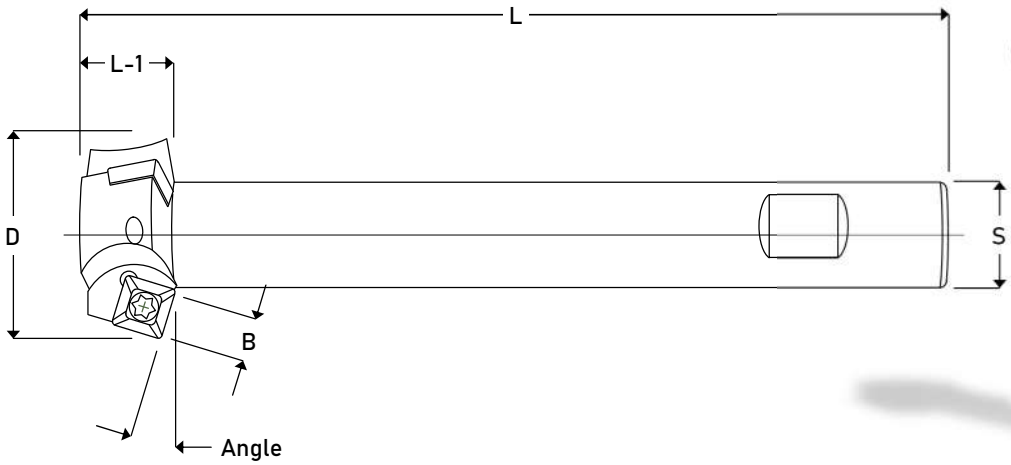

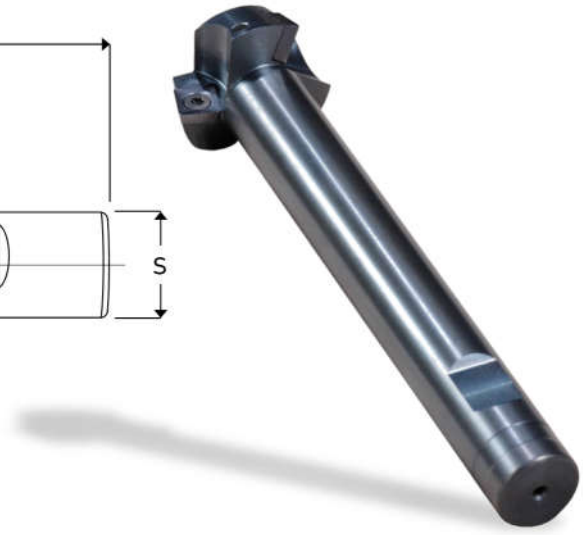

Shank Tools					*Tool Info.*					
Tool #	Angle	Flutes	D	L	L-1	B	S	Insert	Screw	Wrench
CMR-1515	15°	3	1.500	6.000	.625	.312	.750	SPEB-322P	438T	T-10
CMR-2515	15°	3	2.500	6.000	1.250	.687	1.000	SPEB-6352PA	1012T	T-25
CMR-1530	30°	3	1.500	6.000	.625	.312	.750	SPEB-322P	438T	T-10
CMR-2530	30°	3	2.500	6.000	1.250	.687	1.000	SPEB-6352PA	1012T	T-25
CMR-1560	60°	3	1.500	6.000	.795	.312	.750	SPEB-322P	438T	T-10
CMR-2560	60°	3	2.500	6.000	1.650	.687	1.000	SPEB-6352PA	1012T	T-25

Positive Top Inserts

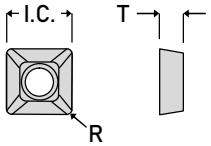

Insert Info.

Insert #	I.C.	T	R	Grades
SPEB-322P	.375	.125	.031	B1M D66 K11 K22
SPEB-6352PA	.750	.220	.031	D66 K11 K22

Speed and Feed Info.

Material	S.F.M.	I.P.T.
Mild & Low Carbon Steel *Ex. 1018, 1020, 1117, 1141, 12L14*	800 - 1200	.003 - .007
High Carbon & Alloy Steel *Ex. 1045, 4140, 4340, 52100, 8620*	500 - 800	.002 - .006
Lower Carbon Tool Steel *Ex. P-20, H-13, S-7*	400 - 700	.002 - .006
Tool Steel *Ex. A-2, A-6, D-2, M-2*	300 - 600	.002 - .006
Stainless Steel *Ex. 304, 316, 420, 15-5PH, 17-4PH*	300 - 600	.002 - .006
Iron *Ex. Cast, Ductile, Nodular*	600 - 1000	.004 - .008
Nickel & Titanium Alloy *Ex. Inconel, Hastelloy, TI-6AL-4V*	120 - 180	.001 - .003
Non-Ferrous Metal *Ex. Aluminum, Bronze, Brass*	1000 - 2500	.004 - .010

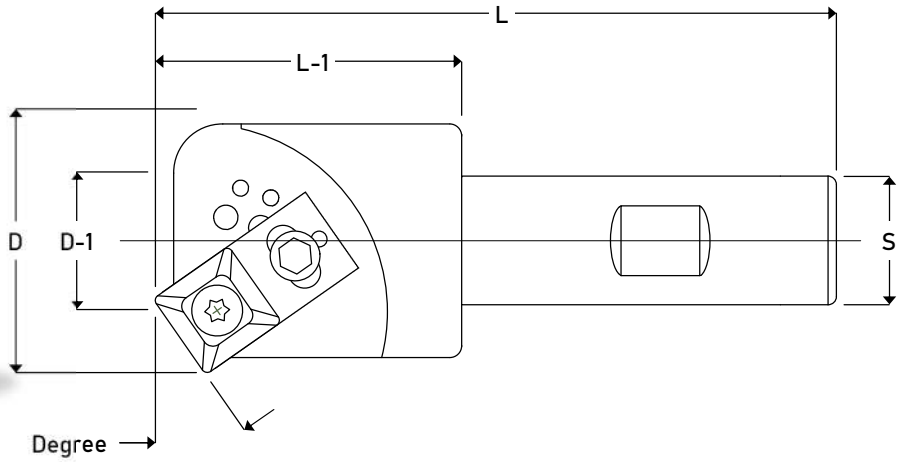

Achieve Any Angle With A Comparator

Shank Tools — *Tool Info.*

Tool #	Flutes	L	L-1	S	Cartridge	Cartridge Screw	Insert
AC-750	1	3.000	1.000	.750	AC2-Cart	#25638	SDEB-2151P
AC-1250	1	3.500	1.500	.750	AC-Cart	#83212	SPEB-422PA
AC-1500	1	3.500	1.500	.750	AC-Cart	#83212	SPEB-422PA

Standard Preset Angle Dimensions — *Tool Info.*

Tool #	0°		15°		30°		45°		60°		75°	
	D	D-1	D	D-1	D	D-1	D	D-1	D	D-1	D	D-1
AC-750	.750	-	.770	.350	.810	.420	.820	.520	.810	.600	.790	.680
AC-1250	1.250	-	1.310	.450	1.390	.590	1.430	.790	1.390	.970	1.350	1.120
AC-1500	1.500	-	1.560	.700	1.640	.840	1.680	1.040	1.640	1.220	1.600	1.370

Positive Top Inserts

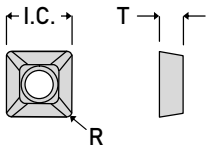

Insert Info.

Insert #	I.C.	T	R	Screw	Wrench	Grade
SDEB-2151P	.250	.093	.015	300T	T-8	K11
SPEB-422PA	.500	.125	.031	614T	T-15	K11

Speed and Feed Info.

Material	S.F.M.	I.P.T.
Mild & Low Carbon Steel *Ex. 1018, 1020, 1117, 1141, 12L14*	800 - 1200	.003 - .007
High Carbon & Alloy Steel *Ex. 1045, 4140, 4340, 52100, 8620*	500 - 800	.002 - .006
Lower Carbon Tool Steel *Ex. P-20, H-13, S-7*	400 - 700	.002 - .006
Tool Steel *Ex. A-2, A-6, D-2, M-2*	300 - 600	.002 - .006
Stainless Steel *Ex. 304, 316, 420, 15-5PH, 17-4PH*	300 - 600	.002 - .006
Iron *Ex. Cast, Ductile, Nodular*	600 - 1000	.004 - .008
Nickel & Titanium Alloy *Ex. Inconel, Hastelloy, TI-6AL-4V*	120 - 180	.001 - .003
Non-Ferrous Metal *Ex. Aluminum, Bronze, Brass*	1000 - 2500	.004 - .010

K-Tool, Inc.

AC

Multi-Angle Chamfer Tools

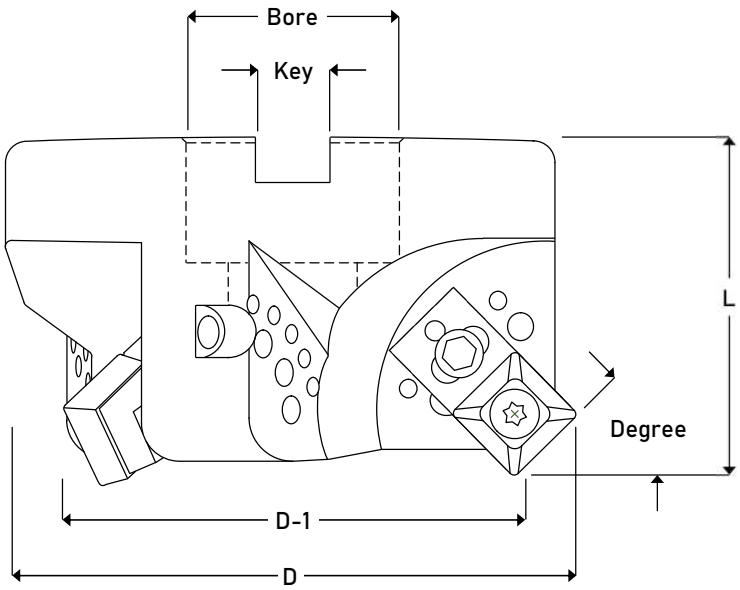

Achieve Any Angle With A Comparator

Shell Mill *Tool Info.*

Tool #	Flutes	L	Bore	Key	Cartridge	Cartridge Screw	Insert
AC-3000	3	1.625	1.000	.375	AC3-Cart	#83234	SPEB-432PA

Standard Preset Angle Dimensions *Tool Info.*

Tool #	0°		15°		30°		45°		60°		75°	
	D	D-1	D	D-1	D	D-1	D	D-1	D	D-1	D	D-1
AC-3000	3.000	-	3.080	2.250	3.180	2.440	3.220	2.620	3.210	2.780	3.160	2.940

Positive Top Insert

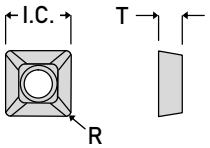

Insert Info.

Insert #	I.C.	T	R	Screw	Wrench	Grades
SPEB-432PA	.500	.187	.031	638T	T-15	B1M D66 K11 K22

Speed and Feed Info.

Material	S.F.M.	I.P.T.
Mild & Low Carbon Steel *Ex. 1018, 1020, 1117, 1141, 12L14*	800 - 1200	.002 - .005
High Carbon & Alloy Steel *Ex. 1045, 4140, 4340, 52100, 8620*	500 - 800	.002 - .004
Lower Carbon Tool Steel *Ex. P-20, H-13, S-7*	400 - 700	.002 - .004
Tool Steel *Ex. A-2, A-6, D-2, M-2*	300 - 600	.002 - .004
Stainless Steel *Ex. 304, 316, 420, 15-5PH, 17-4PH*	300 - 600	.002 - .004
Iron *Ex. Cast, Ductile, Nodular*	600 - 1000	.003 - .007
Nickel & Titanium Alloy *Ex. Inconel, Hastelloy, TI-6AL-4V*	120 - 180	.001 - .002
Non-Ferrous Metal *Ex. Aluminum, Bronze, Brass*	1000 - 2500	.003 - .007

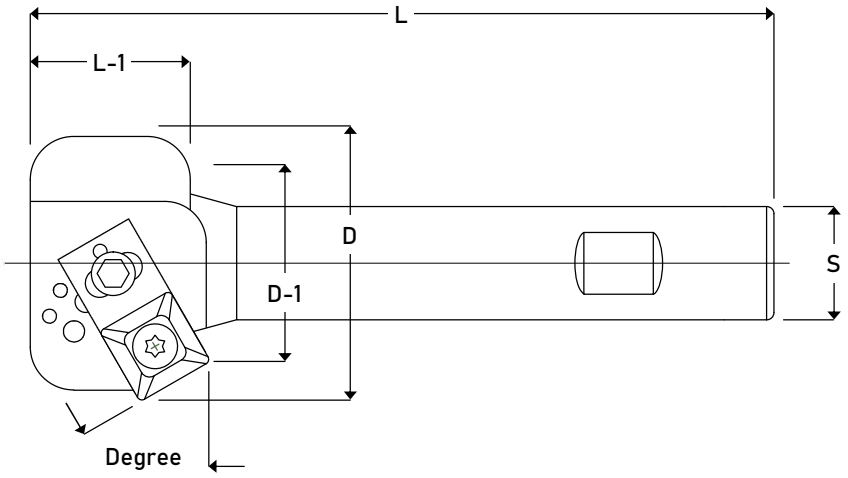

Achieve Any Angle With A Comparator

Shank Tool			*Tool Info.*				
Tool #	Flutes	L	L-1	S	Cartridge	Cartridge Screw	Insert
ACR-1500	1	4.500	1.000	.750	AC-Cart	#83212	SPEB-422PA

Standard Preset Angle Dimensions							*Tool Info.*					
Tool #	0°		15°		30°		45°		60°		75°	
	D	D-1	D	D-1	D	D-1	D	D-1	D	D-1	D	D-1
ACR-1500	1.500	-	1.560	.700	1.640	.840	1.680	1.040	1.640	1.220	1.600	1.370

Positive Top Insert

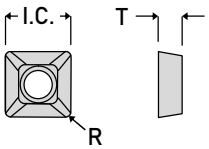

Insert Info.

Insert #	I.C.	T	R	Screw	Wrench	Grade
SPEB-422PA	.500	.125	.031	614T	T-15	K11

Speed and Feed Info.

Material	S.F.M.	I.P.T.
Mild & Low Carbon Steel *Ex. 1018, 1020, 1117, 1141, 12L14*	800 - 1200	.002 - .005
High Carbon & Alloy Steel *Ex. 1045, 4140, 4340, 52100, 8620*	500 - 800	.002 - .004
Lower Carbon Tool Steel *Ex. P-20, H-13, S-7*	400 - 700	.002 - .004
Tool Steel *Ex. A-2, A-6, D-2, M-2*	300 - 600	.002 - .004
Stainless Steel *Ex. 304, 316, 420, 15-5PH, 17-4PH*	300 - 600	.002 - .004
Iron *Ex. Cast, Ductile, Nodular*	600 - 1000	.003 - .007
Nickel & Titanium Alloy *Ex. Inconel, Hastelloy, TI-6AL-4V*	120 - 180	.001 - .002
Non-Ferrous Metal *Ex. Aluminum, Bronze, Brass*	1000 - 2500	.003 - .007

DCR

Drill Chamfer Rings

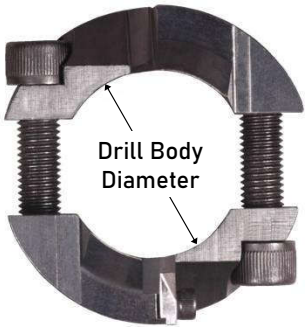

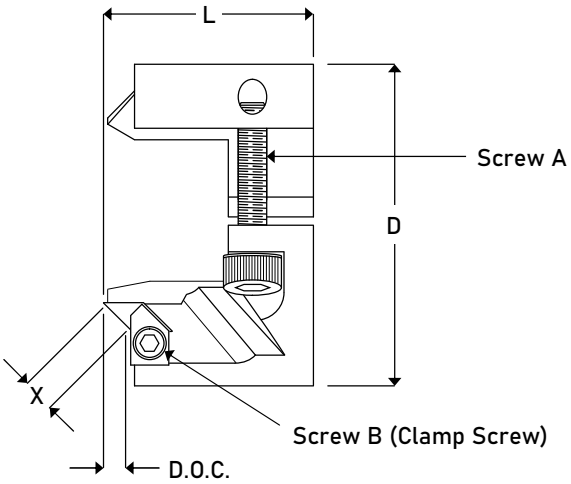

Tool Info.

Tool #	Drill Body Dia.	D.O.C	X	L	D	Insert
DCR-30-40	.300 - .400	.180	.250	1.000	1.220	DDG-45
DCR-40-50	.401 - .500	.180	.250	1.000	1.220	
DCR-50-62	.501 - .625	.180	.250	1.140	1.470	
DCR-62-75	.626 - .750	.180	.250	1.140	1.470	
DCR-75-87	.751 - .875	.180	.250	1.280	1.730	
DCR-87-100	.876 - 1.000	.180	.250	1.280	1.730	
DCR-100-112	1.001 - 1.125	.180	.250	1.280	1.970	
DCR-112-125	1.126 - 1.250	.180	.250	1.280	1.970	
DCR-125-138	1.251 - 1.375	.180	.250	1.440	2.130	
DCR-138-150	1.376 - 1.500	.180	.250	1.440	2.250	

Tool #	Screw A	Wrench	Screw B	Wrench	Clamp
DCR-30-40	#103275	5/32"	#44025	3/32"	KCL-1
DCR-40-50	#103275	5/32"			
DCR-50-62	#103275	5/32"			
DCR-62-75	#103275	5/32"			
DCR-75-87	#142810	3/16"			
DCR-87-100	#142810	3/16"			
DCR-100-112	#142810	3/16"			
DCR-112-125	#142810	3/16"			
DCR-125-138	#142810	3/16"			
DCR-138-150	#142810	3/16"			

Allen wrenches are not supplied with Chamfer Rings.

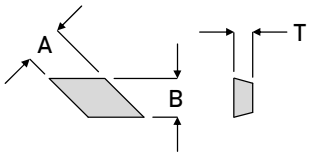

Insert Info.

Insert #	A	B	T	Grade
DDG-45	.190	.187	.093	K11

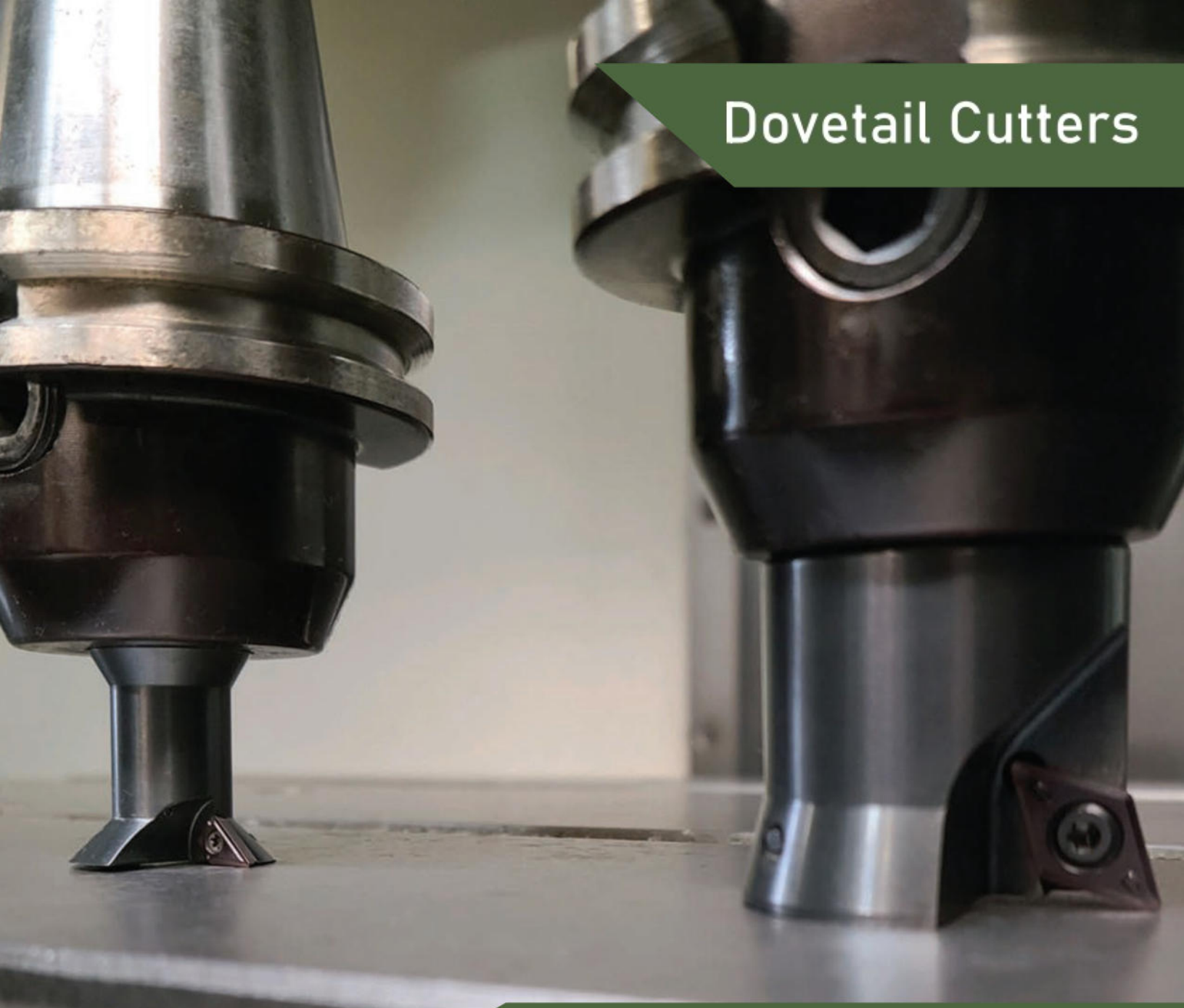

Dovetail Cutters

Available in 15° - 30° - 45°

K-Tool, Inc.

DT

Dovetail Cutters

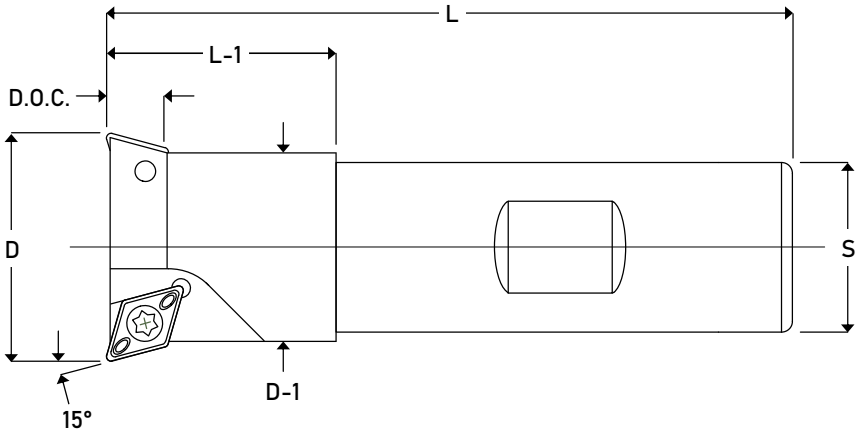

Tool Info.								
Tool #	D	D-1	Flutes	L	L-1	D.O.C.	S	Inserts
DT-1015	1.000	.830	2	3.000	1.000	.255	.750	DDEB-2151P
DT-1515	1.500	1.250	2	3.250	1.250	.370	.750	DPEB-3252P

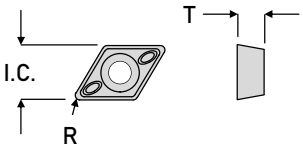

Insert Info	
DDEB-2151P	
Grades	K11 K22
I.C.	.250
T	.095
R	.015
Screw	314T
Wrench	T-8

Insert Info	
DPEB-3252P	
Grade	K11
I.C.	.375
T	.160
R	.031
Screw	538T
Wrench	T-10

Speed and Feed Info.		
Material	S.F.M.	I.P.T.
Mild & Low Carbon Steel *Ex. 1018, 1020, 1117, 1141, 12L14*	800 - 1200	.002 - .005
High Carbon & Alloy Steel *Ex. 1045, 4140, 4340, 52100, 8620*	500 - 800	.002 - .005
Lower Carbon Tool Steel *Ex. P-20, H-13, S-7*	400 - 700	.002 - .005
Tool Steel *Ex. A-2, A-6, D-2, M-2*	300 - 600	.002 - .005
Stainless Steel *Ex. 304, 316, 420, 15-5PH, 17-4PH*	300 - 600	.002 - .005
Iron *Ex. Cast, Ductile, Nodular*	600 - 1000	.002 - .006
Nickel & Titanium Alloy *Ex. Inconel, Hastelloy, TI-6AL-4V*	120 - 180	.001 - .002
Non-Ferrous Metal *Ex. Aluminum, Bronze, Brass*	1000 - 2500	.002 - .006

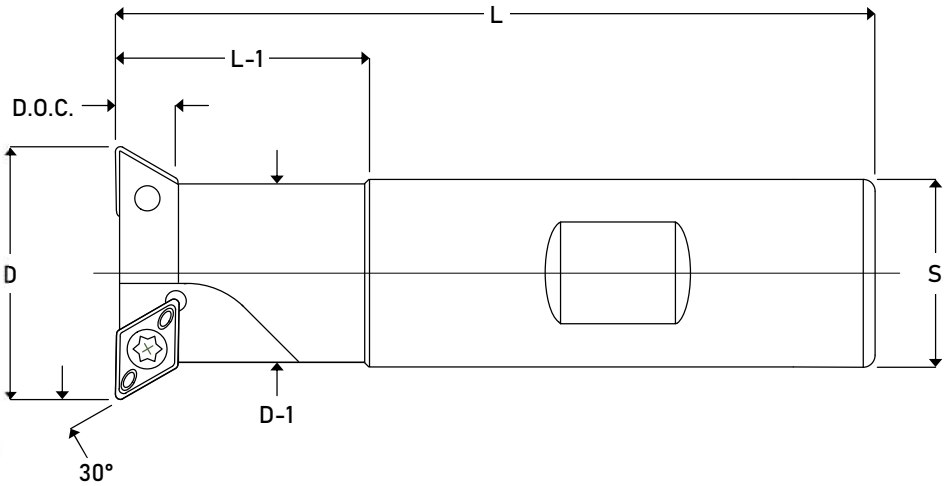

Tool Info.

Tool #	D	D-1	Flutes	L	L-1	D.O.C.	S	Inserts
DT-1075	1.000	.700	2	3.000	1.000	.220	.750	DDEB-2151P
DT-1575	1.500	1.062	2	3.250	1.250	.345	.750	DPEB-3252P

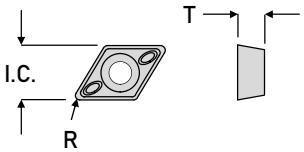

Insert Info

DDEB-2151P	
Grades	K11 K22
I.C.	.250
T	.095
R	.015
Screw	314T
Wrench	T-8

Insert Info

DPEB-3252P	
Grade	K11
I.C.	.375
T	.160
R	.031
Screw	538T
Wrench	T-10

Speed and Feed Info.

Material	S.F.M.	I.P.T.
Mild & Low Carbon Steel *Ex. 1018, 1020, 1117, 1141, 12L14*	800 - 1200	.002 - .005
High Carbon & Alloy Steel *Ex. 1045, 4140, 4340, 52100, 8620*	500 - 800	.002 - .005
Lower Carbon Tool Steel *Ex. P-20, H-13, S-7*	400 - 700	.002 - .005
Tool Steel *Ex. A-2, A-6, D-2, M-2*	300 - 600	.002 - .005
Stainless Steel *Ex. 304, 316, 420, 15-5PH, 17-4PH*	300 - 600	.002 - .005
Iron *Ex. Cast, Ductile, Nodular*	600 - 1000	.002 - .006
Nickel & Titanium Alloy *Ex. Inconel, Hastelloy, TI-6AL-4V*	120 - 180	.001 - .002
Non-Ferrous Metal *Ex. Aluminum, Bronze, Brass*	1000 - 2500	.002 - .006

DT

Dovetail Cutters

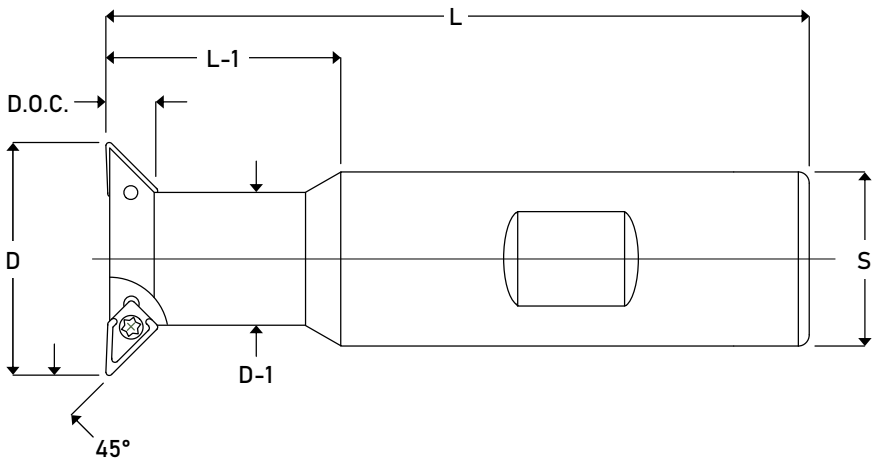

Tool Info.

Tool #	D	D-1	Flutes	L	L-1	D.O.C.	S	Insert
DT-5050	.500	.312	1	2.500	.750	.110	.500	
DT-6250	.625	.312	1	2.500	.750	.170	.500	
DT-7550	.750	.375	1	2.500	.750	.200	.500	DTI-1511P
DT-1175	1.000	.562	2	3.000	1.000	.200	.750	
DT-1210	1.250	.812	3	3.500	1.250	.200	1.000	

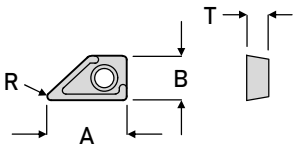

Insert Info

DTI-1511P	
Grade	K11
A	.328
B	.187
T	.082
R	.015
Screw	164T
Wrench	T-6

Speed and Feed Info.

Material	S.F.M.	I.P.T.
Mild & Low Carbon Steel *Ex. 1018, 1020, 1117, 1141, 12L14*	800 - 1200	.001 - .002
High Carbon & Alloy Steel *Ex. 1045, 4140, 4340, 52100, 8620*	500 - 800	.001 - .002
Lower Carbon Tool Steel *Ex. P-20, H-13, S-7*	400 - 700	.001 - .002
Tool Steel *Ex. A-2, A-6, D-2, M-2*	300 - 600	.001 - .002
Stainless Steel *Ex. 304, 316, 420, 15-5PH, 17-4PH*	300 - 600	.001 - .002
Iron *Ex. Cast, Ductile, Nodular*	600 - 1000	.001 - .002
Nickel & Titanium Alloy *Ex. Inconel, Hastelloy, TI-6AL-4V*	120 - 180	.001 - .002
Non-Ferrous Metal *Ex. Aluminum, Bronze, Brass*	1000 - 2500	.001 - .003

Mini Mills

Free Cutting for Faster Feed Rates
2 Cutting Edges Per Insert

MM
Mini Mills

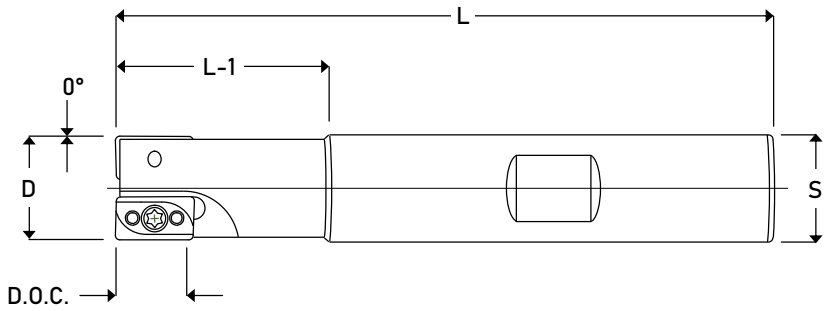

Tool Info.

Tool #	D	Flutes	L	L-1	D.O.C.	S	Insert	Screw	Wrench
MM-250	.250	1	2.030	.500	.218	.375	MGH-151 MGH-1510 MGH-1511	164T	T-6
XMM-250	.250	1	3.000	.680	.218	.375			
MM-281	.281	1	2.030	.500	.218	.375			
MM-312	.312	1	2.030	.500	.218	.375			
MM-343	.343	1	2.250	.720	.218	.375			
MM-375	.375	2	2.250	.720	.218	.375			
XMM-375	.375	1	3.500	1.970	.218	.375			
MM-406	.406	2	2.500	.750	.218	.500			
MM-437	.437	2	2.500	.750	.218	.500			
MM-468	.468	2	2.500	.750	.218	.500			
MM-500	.500	3	2.500	.750	.218	.500			
XMM-500	.500	2	4.000	2.250	.218	.500			
MM-625	.625	4	2.625	.750	.218	.625			
MM-750	.750	5	2.750	.750	.218	.750			

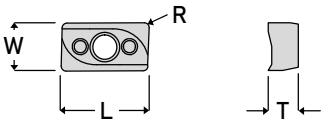

Insert Info.

Insert #	W	L	T	R	Grades
MGH-151	.170	.250	.080	.002	B1M K11
MGH-1510	.170	.250	.080	.008	K11
MGH-1511	.170	.250	.080	.015	K11

Speed and Feed Info.

Material	S.F.M.	I.P.T.
Mild & Low Carbon Steel *Ex. 1018, 1020, 1117, 1141, 12L14*	800 - 1200	.001 - .002
High Carbon & Alloy Steel *Ex. 1045, 4140, 4340, 52100, 8620*	500 - 800	.001 - .002
Lower Carbon Tool Steel *Ex. P-20, H-13, S-7*	400 - 700	.001 - .002
Tool Steel *Ex. A-2, A-6, D-2, M-2*	300 - 600	.001 - .002
Stainless Steel *Ex. 304, 316, 420, 15-5PH, 17-4PH*	300 - 600	.001 - .002
Iron *Ex. Cast, Ductile, Nodular*	600 - 1000	.001 - .002
Nickel & Titanium Alloy *Ex. Inconel, Hastelloy, TI-6AL-4V*	120 - 180	.001
Non-Ferrous Metal *Ex. Aluminum, Bronze, Brass*	1000 - 2500	.001 - .002

Radius Mills

.015 to .250 Radius Inserts Available
Cuts a Square Shoulder within .001
Extended Length Tools Available
Available in Shank & Shell Mount

K-Tool, Inc.

.015 - .031 - .047 - .062 Radius

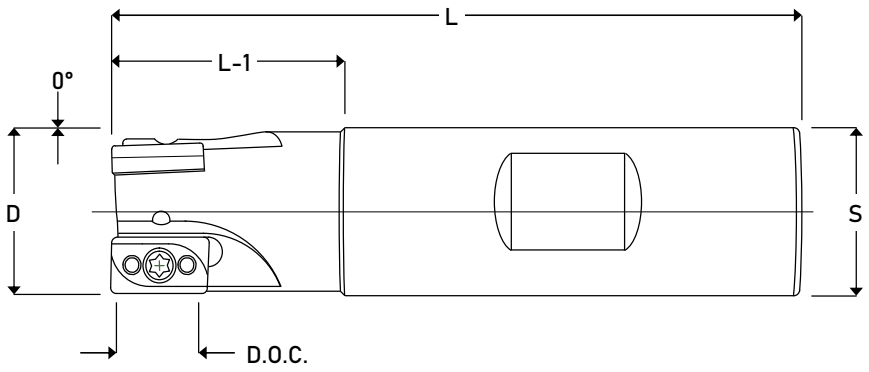

Tool Info.

Tool #	D	Flutes	L	L-1	D.O.C.	S	Inserts	Screw	Wrench
RMS-375	.375	1	2.625	.340	.310	.500	MGH-2321 MGH-2322 MGH-2323 MGH-2324	314T	T-8
RMS-500	.500	1	2.750	.750	.380	.500			
XRM-500	.500	1	3.625	1.500	.380	.750			
RMS-625	.625	2	3.000	1.000	.380	.625			
XRM-625	.625	1	3.875	1.875	.380	.750			
RMS-750	.750	3	3.000	1.000	.380	.750			
XRM-750	.750	2	4.250	2.250	.380	.750			
RMS-875	.875	3	3.250	1.250	.380	.750			
RMS-1000	1.000	4	3.250	1.250	.380	.750			

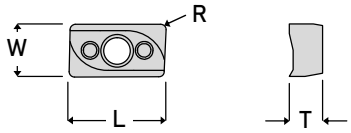

Insert Info.

Insert #	W	L	T	R	Grades
MGH-2321	.250	.400	.140	.015	K11
MGH-2322	.250	.400	.140	.031	K11
MGH-2323	.250	.400	.140	.047	K11
MGH-2324	.250	.400	.140	.062	K11

Speed and Feed Info.

Material	S.F.M.	.375-.625 Dia. I.P.T.	.750 - 1.000 Dia. I.P.T.
Mild & Low Carbon Steel *Ex. 1018, 1020, 1117, 1141, 12L14*	800 - 1200	.002 - .003	.002 - .006
High Carbon & Alloy Steel *Ex. 1045, 4140, 4340, 52100, 8620*	500 - 800	.002 - .003	.002 - .005
Lower Carbon Tool Steel *Ex. P-20, H-13, S-7*	400 - 700	.002 - .003	.002 - .005
Tool Steel *Ex. A-2, A-6, D-2, M-2*	300 - 600	.002 - .003	.002 - .004
Stainless Steel *Ex. 304, 316, 420, 15-5PH, 17-4PH*	300 - 600	.002 - .003	.002 - .004
Iron *Ex. Cast, Ductile, Nodular*	600 - 1000	.002 - .003	.003 - .006
Nickel & Titanium Alloy *Ex. Inconel, Hastelloy, TI-6AL-4V*	120 - 180	.001 - .002	.001 - .002
Non-Ferrous Metal *Ex. Aluminum, Bronze, Brass*	1000 - 2500	.002 - .004	.003 - .007

.015 - .031 - .062 - .093 - .125 Radius

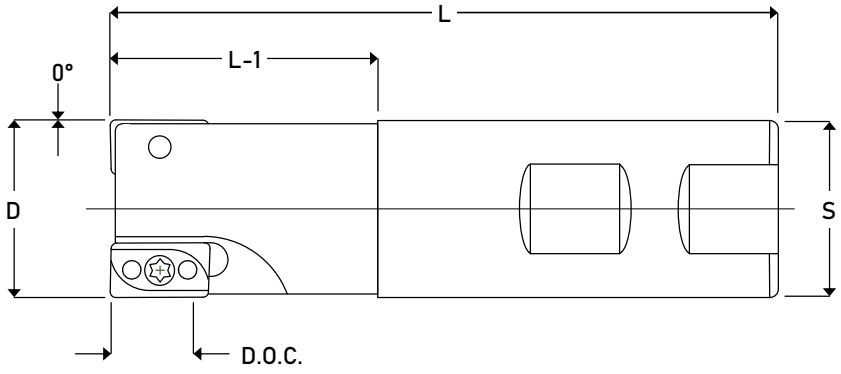

Tool Info.

Tool #	D	Flutes	L	L-1	D.O.C.	S	Inserts	Screw	Wrench
RM-750A	.750	2	3.250	1.250	.540	.750	MGH-531A MGH-532A MGH-534A MGH-536A MGH-538A	560T	T-10
RM-980A	.980	2	3.750	1.500	.540	1.000			
RM-1000A-2	1.000	2	3.750	1.500	.540	1.000			
RM-1000A-3	1.000	3	3.750	1.500	.540	1.000			
XRM-1000A	1.000	2	5.250	3.000	.540	1.000			
RM-1250A-3	1.250	3	4.000	.875	.540	1.000			
RM-1250A-4	1.250	4	4.000	.875	.540	1.000			
RM-1500A-4	1.500	4	4.000	.875	.540	1.000			
RM-1500A-5	1.500	5	4.000	.875	.540	1.000			

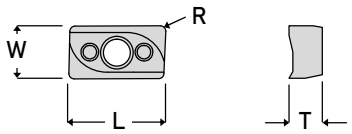

Insert Info.

Insert #	W	L	T	R	Grades
MGH-531A	.313	.562	.190	.015	K11
MGH-532A	.313	.562	.190	.031	K11
MGH-534A	.313	.562	.190	.062	K11
MGH-536A	.313	.562	.190	.093	K11
MGH-538A	.313	.562	.190	.125	K11

Speed and Feed Info.

Material	S.F.M.	I.P.T.
Mild & Low Carbon Steel *Ex. 1018, 1020, 1117, 1141, 12L14*	800 - 1200	.002 - .006
High Carbon & Alloy Steel *Ex. 1045, 4140, 4340, 52100, 8620*	500 - 800	.002 - .005
Lower Carbon Tool Steel *Ex. P-20, H-13, S-7*	400 - 700	.002 - .005
Tool Steel *Ex. A-2, A-6, D-2, M-2*	300 - 600	.002 - .004
Stainless Steel *Ex. 304, 316, 420, 15-5PH, 17-4PH*	300 - 600	.002 - .004
Iron *Ex. Cast, Ductile, Nodular*	600 - 1000	.003 - .006
Nickel & Titanium Alloy *Ex. Inconel, Hastelloy, TI-6AL-4V*	120 - 180	.001 - .002
Non-Ferrous Metal *Ex. Aluminum, Bronze, Brass*	1000 - 2500	.003 - .007

K-Tool, Inc.

.156 - .187 - .250 Radius

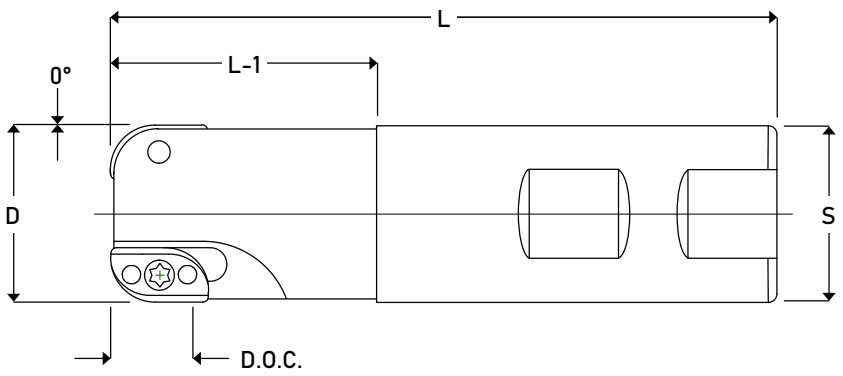

Tool Info.

Tool #	D	Flutes	L	L-1	D.O.C.	S	Inserts	Screw	Wrench
RM-750B	.750	2	3.250	1.250	.540	.750	MGH-5310B MGH-5312B MGH-5316B	560T	T-10
RM-980B	.980	2	3.750	1.500	.540	1.000			
RM-1000B-2	1.000	2	3.750	1.500	.540	1.000			
RM-1000B-3	1.000	3	3.750	1.500	.540	1.000			
XRM-1000B	1.000	2	5.250	3.000	.540	1.000			
RM-1250B-3	1.250	3	4.000	.875	.540	1.000			
RM-1250B-4	1.250	4	4.000	.875	.540	1.000			
RM-1500B-4	1.500	4	4.000	.875	.540	1.000			
RM-1500B-5	1.500	5	4.000	.875	.540	1.000			

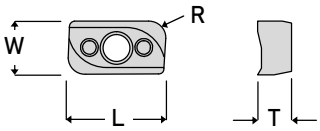

Insert Info.

Insert #	W	L	T	R	Grade
MGH-5310B	.313	.562	.190	.156	K11
MGH-5312B	.313	.562	.190	.187	K11
MGH-5316B	.313	.562	.190	.250	K11

Speed and Feed Info.

Material	S.F.M.	I.P.T.
Mild & Low Carbon Steel *Ex. 1018, 1020, 1117, 1141, 12L14*	800 - 1200	.002 - .006
High Carbon & Alloy Steel *Ex. 1045, 4140, 4340, 52100, 8620*	500 - 800	.002 - .005
Lower Carbon Tool Steel *Ex. P-20, H-13, S-7*	400 - 700	.002 - .005
Tool Steel *Ex. A-2, A-6, D-2, M-2*	300 - 600	.002 - .004
Stainless Steel *Ex. 304, 316, 420, 15-5PH, 17-4PH*	300 - 600	.002 - .004
Iron *Ex. Cast, Ductile, Nodular*	600 - 1000	.003 - .006
Nickel & Titanium Alloy *Ex. Inconel, Hastelloy, TI-6AL-4V*	120 - 180	.001 - .002
Non-Ferrous Metal *Ex. Aluminum, Bronze, Brass*	1000 - 2500	.003 - .007

A & B Series

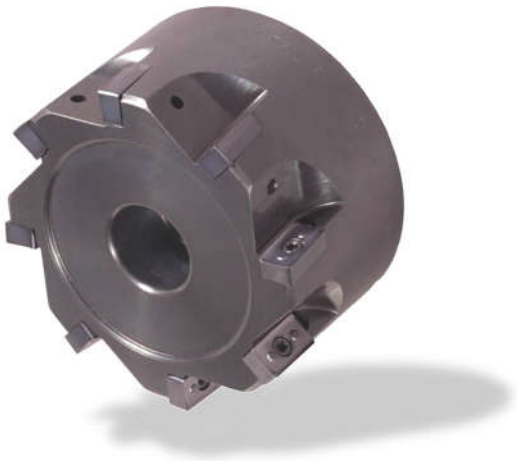

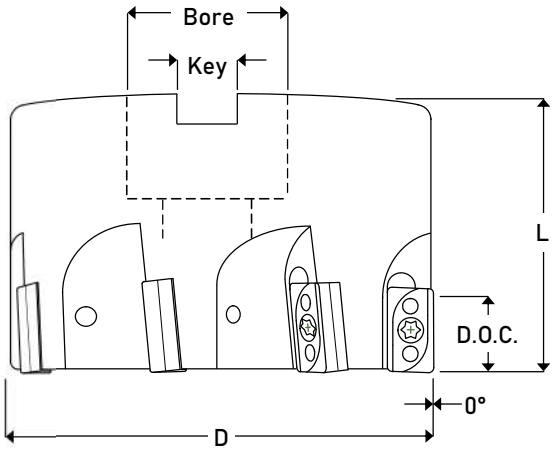

A Series

.015 - .031 - .062 - .093 - .125 Radius

Tool Info.

Tool #	D	Flutes	L	D.O.C.	Bore	Key	Inserts	Screw	Wrench
RM-2000A	2.000	6	1.625	.540	.750	.312	MGH-531A MGH-532A MGH-534A MGH-536A MGH-538A	560T	T-10
RM-2500A	2.500	7	1.625	.540	1.000	.375			
RM-3000A	3.000	8	1.750	.540	1.000	.375			

B Series

.156 - .187 - .250 Radius

Tool Info.

Tool #	D	Flutes	L	D.O.C.	Bore	Key	Inserts	Screw	Wrench
RM-2000B	2.000	6	1.625	.540	.750	.312	MGH-5310B MGH-5312B MGH-5316B	560T	T-10
RM-2500B	2.500	7	1.625	.540	1.000	.375			
RM-3000B	3.000	8	1.750	.540	1.000	.375			

For Larger Diameters, Refer to Universal Mills on Page 127

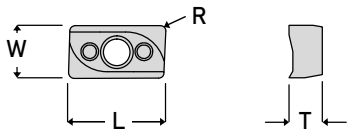

Insert Info.

Insert #	W	L	T	R	Grades
MGH-531A	.313	.562	.190	.015	K11
MGH-532A	.313	.562	.190	.031	B1M K11
MGH-534A	.313	.562	.190	.062	K11
MGH-536A	.313	.562	.190	.093	K11
MGH-538A	.313	.562	.190	.125	K11
MGH-5310B	.313	.562	.190	.156	K11
MGH-5312B	.313	.562	.190	.187	K11
MGH-5316B	.313	.562	.190	.250	K11

Speed and Feed Info.

Material	S.F.M.	I.P.T.
Mild & Low Carbon Steel *Ex. 1018, 1020, 1117, 1141, 12L14*	800 - 1200	.002 - .006
High Carbon & Alloy Steel *Ex. 1045, 4140, 4340, 52100, 8620*	500 - 800	.002 - .005
Lower Carbon Tool Steel *Ex. P-20, H-13, S-7*	400 - 700	.002 - .005
Tool Steel *Ex. A-2, A-6, D-2, M-2*	300 - 600	.002 - .004
Stainless Steel *Ex. 304, 316, 420, 15-5PH, 17-4PH*	300 - 600	.002 - .004
Iron *Ex. Cast, Ductile, Nodular*	600 - 1000	.003 - .006
Nickel & Titanium Alloy *Ex. Inconel, Hastelloy, TI-6AL-4V*	120 - 180	.001 - .002
Non-Ferrous Metal *Ex. Aluminum, Bronze, Brass*	1000 - 2500	.003 - .007

K-Tool, Inc.

.015 - .250 Radius

RML

Radius Mills

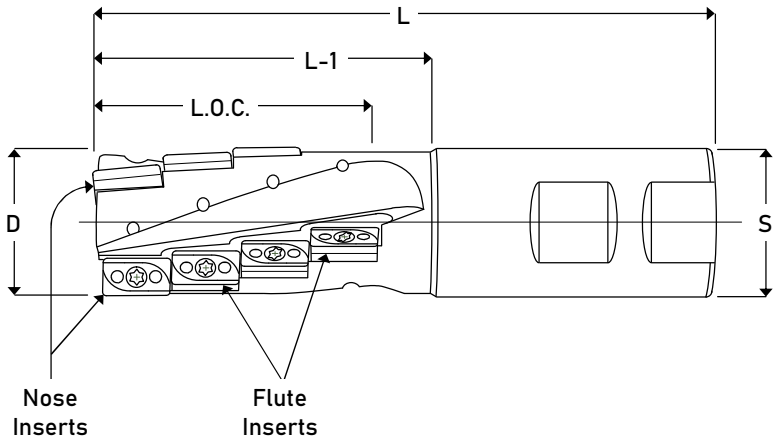

Tool Info.

Tool #	D	Flutes	Inserts	L	L-1	L.O.C.	S	Nose Inserts	Flute Inserts	Screw	Wrench
RML-1000A	1.000	2-1 Effective	6	4.250	2.000	1.700	1.000	MGH-531A MGH-532A MGH-534A MGH-536A MGH-538A	MGH-532A	560T	T-10
RML-1250A	1.250	3-1.5 Effective	12	5.000	2.750	2.250	1.250				
RML-1500A	1.500	4-2 Effective	20	5.500	3.250	2.800	1.250				
RML-2000A	2.000	4-2 Effective	24	6.687	4.000	3.400	1.500				
RML-1000B	1.000	2-1 Effective	6	4.250	2.000	1.700	1.000	MGH-5310B MGH-5312B MGH-5316B			
RML-1250B	1.250	3-1.5 Effective	12	5.000	2.750	2.250	1.250				
RML-1500B	1.500	4-2 Effective	20	5.500	3.250	2.800	1.250				
RML-2000B	2.000	4-2 Effective	24	6.687	4.000	3.400	1.500				

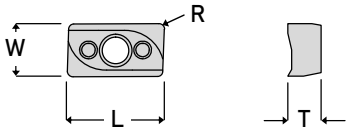

Insert Info.

Insert #	W	L	T	R	Grades
MGH-531A	.313	.562	.190	.015	K11
MGH-532A	.313	.562	.190	.031	K11
MGH-534A	.313	.562	.190	.062	K11
MGH-536A	.313	.562	.190	.093	K11
MGH-538A	.313	.562	.190	.125	K11
MGH-5310B	.313	.562	.190	.156	K11
MGH-5312B	.313	.562	.190	.187	K11
MGH-5316B	.313	.562	.190	.250	K11

Speed and Feed Info.

Material	S.F.M.	I.P.T.
Mild & Low Carbon Steel *Ex. 1018, 1020, 1117, 1141, 12L14*	400 - 800	.003 - .008
High Carbon & Alloy Steel *Ex. 1045, 4140, 4340, 52100, 8620*	300 - 500	.002 - .006
Lower Carbon Tool Steel *Ex. P-20, H-13, S-7*	300 - 500	.002 - .006
Tool Steel *Ex. A-2, A-6, D-2, M-2*	300 - 500	.002 - .004
Stainless Steel *Ex. 304, 316, 420, 15-5PH, 17-4PH*	300 - 500	.002 - .004
Iron *Ex. Cast, Ductile, Nodular*	400 - 800	.003 - .009
Nickel & Titanium Alloy *Ex. Inconel, Hastelloy, TI-6AL-4V*	100 - 200	.001 - .003
Non-Ferrous Metal *Ex. Aluminum, Bronze, Brass*	800 - 1200	.004 - .010

Keli Mills

Great Tool for Cast Iron, Inconel, Stainless Steel & Aluminum

Cuts a Square Shoulder Within .001
Long Edge Tools Available
.031 to .062 Radius Inserts
Available in Shank & Shell Mount Style

K-Tool, Inc.

KE

Keli-Mills

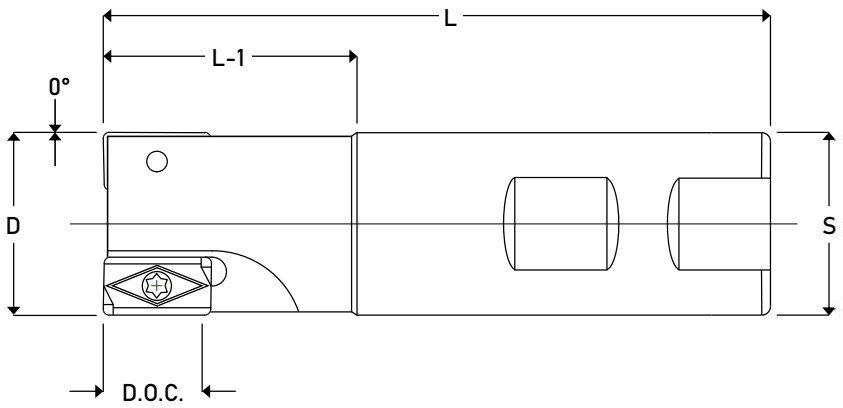

Tool Info.

Tool #	D	Flutes	L	L-1	D.O.C.	S	Inserts	Screw	Wrench
KE-1000-2	1.000	2	3.750	1.500	.580	1.000	LPMT-52-532 LPMT-52-533 LPMT-52-534	560T	T-10
KE-1000-3	1.000	3	3.750	1.500	.580	1.000			
KE-1250-3	1.250	3	4.000	.875	.580	1.000			
KE-1250-4	1.250	4	4.000	.875	.580	1.000			
KE-1500-4	1.500	4	4.000	.875	.580	1.000			
KE-1500-5	1.500	5	4.000	.875	.580	1.000			

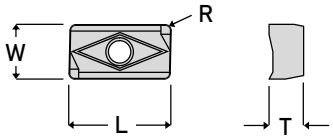

Insert Info.

Insert #	W	L	T	R	Grades
LPMT-52-532	.320	.600	.208	.031	B1M K11
LPMT-52-533	.320	.600	.208	.047	K11 K22
LPMT-52-534	.320	.600	.208	.062	K11 K22

Speed and Feed Info.

Material	S.F.M.	I.P.T.
Stainless Steel *Ex. 304, 316, 420, 15-5PH, 17-4PH*	300 - 600	.002 - .004
Iron *Ex. Cast, Ductile, Nodular*	600 - 1200	.003 - .007
Nickel & Titanium Alloy *Ex. Inconel, Hastelloy, TI-6AL-4V*	120 - 180	.001 - .004
Non-Ferrous Metal *Ex. Aluminum, Bronze, Brass*	1000 - 2500	.005 - .010

WWW.KTOOLINC.COM

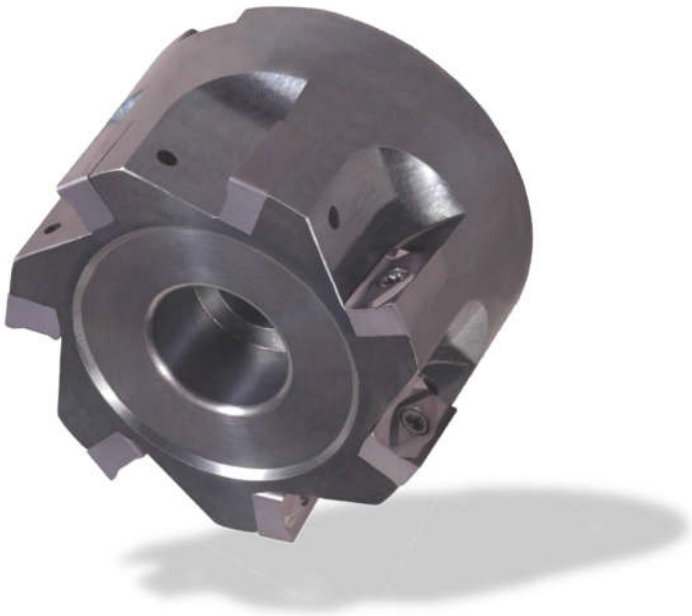

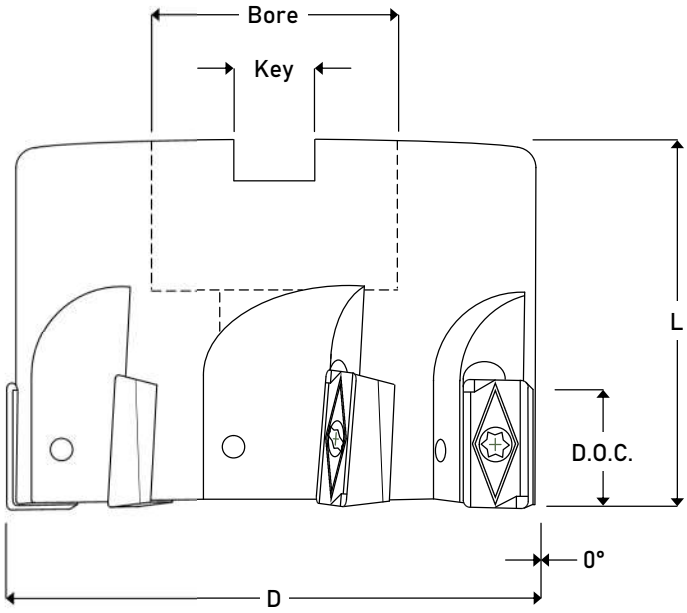

Tool Info.

Tool #	D	Flutes	L	D.O.C.	Bore	Key	Inserts	Screw	Wrench
KE-2000	2.000	6	1.625	.580	.750	.312	LPMT-52-532 LPMT-52-533 LPMT-52-534	560T	T-10
KE-2500	2.500	7	1.625	.580	1.000	.375			
KE-3000	3.000	8	1.750	.580	1.250	.500			

For Larger Diameters, Refer to Universal Mills on Page 127

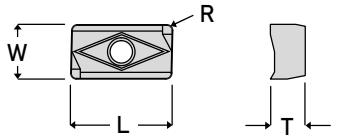

Insert Info.

Insert #	W	L	T	R	Grades
LPMT-52-532	.320	.600	.208	.031	B1M K11
LPMT-52-533	.320	.600	.208	.047	K11 K22
LPMT-52-534	.320	.600	.208	.062	K11 K22

Speed and Feed Info.

Material	S.F.M.	I.P.T.
Stainless Steel *Ex. 304, 316, 420, 15-5PH, 17-4PH*	300 - 600	.002 - .004
Iron *Ex. Cast, Ductile, Nodular*	600 - 1200	.003 - .007
Nickel & Titanium Alloy *Ex. Inconel, Hastelloy, TI-6AL-4V*	120 - 180	.001 - .004
Non-Ferrous Metal *Ex. Aluminum, Bronze, Brass*	1000 - 2500	.005 - .010

K-Tool, Inc.

Long Edge

KEL

Keli-Mills

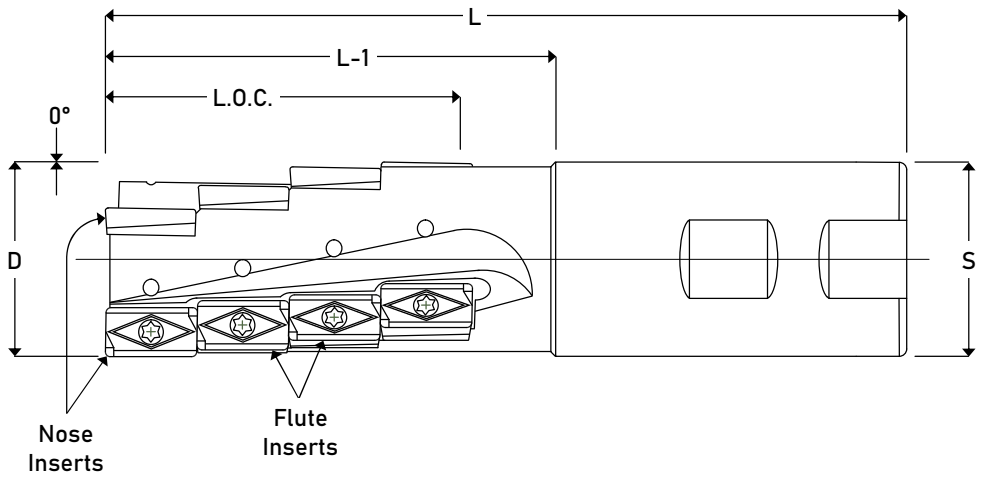

Tool Info.

Tool #	D	Flutes	Inserts	L	L-1	L.O.C.	S	Nose Inserts	Flute Insert	Screw	Wrench
KEL-1000	1.000	2-1 Effective	6	4.500	2.250	1.800	1.000	LPMT-52-532 LPMT-52-533 LPMT-52-534	LPMT-52-532	560T	T-10
KEL-1250	1.250	3-1.5 Effective	12	5.125	2.880	2.400	1.250				
KEL-1500	1.500	3-1.5 Effective	15	5.750	3.500	3.000	1.250				

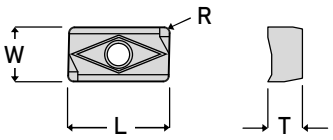

Insert Info.

Insert #	W	L	T	R	Grades
LPMT-52-532	.320	.600	.208	.031	B1M K11
LPMT-52-533	.320	.600	.208	.047	K11 K22
LPMT-52-534	.320	.600	.208	.062	K11

Speed and Feed Info.

Material	S.F.M.	I.P.T.
Stainless Steel *Ex. 304, 316, 420, 15-5PH, 17-4PH*	300 - 500	.002 - .004
Iron *Ex. Cast, Ductile, Nodular*	400 - 800	.004 - .008
Nickel & Titanium Alloy *Ex. Inconel, Hastelloy, TI-6AL-4V*	100 - 200	.001 - .003
Non-Ferrous Metal *Ex. Aluminum, Bronze, Brass*	800 - 1200	.005 - .010

Serators

Serrated Edge to Reduce CuttingPressure
Cuts .010 to .020 Undersize for Finishing
Multiple Style Inserts Available Availablein
Shank, Shell & CAT-50 Taper

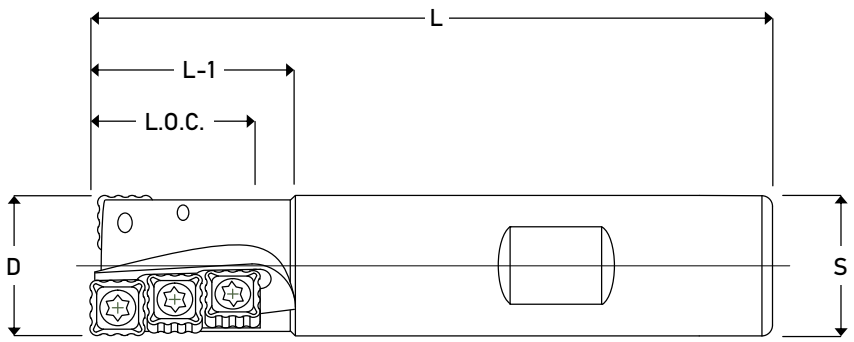

Tool Info.

Tool #	D	Flutes	Inserts	L	L-1	L.O.C.	S	Inserts	Screw	Wrench
S-625	.615	2-1 Effective	6	3.000	.900	.750	.625	SNMC-222B SNMC-221P	314T	T-8
S-750	.740	2-1 Effective	8	3.375	1.125	1.000	.750			

IMPORTANT

High Pressure Flood Coolant or Air Blast Required to Disperse Chip and Cool the Tool

Recutting Chips Will Cause Early Insert Failure

Positive Top Insert

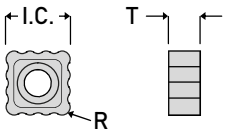

Insert Info.

Insert #	I.C.	T	R	Grade
SNMC-222B	.250	.125	.031	K11

Positive Top Insert

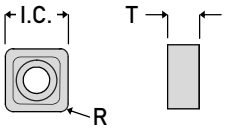

Insert Info.

Insert #	I.C.	T	R	Grade
SNMC-221P	.250	.125	.015	K11

Speed and Feed Info.

Material	S.F.M.	I.P.T.
Mild & Low Carbon Steel *Ex. 1018, 1020, 1117, 1141, 12L14*	600 - 1200	.002 - .003
High Carbon & Alloy Steel *Ex. 1045, 4140, 4340, 52100, 8620*	500 - 800	.002 - .003
Lower Carbon Tool Steel *Ex. P-20, H-13, S-7*	400 - 700	.002 - .003
Tool Steel *Ex. A-2, A-6, D-2, M-2*	300 - 600	.002 - .003
Stainless Steel *Ex. 304, 316, 420, 15-5PH, 17-4PH*	300 - 600	.002 - .003
Iron *Ex. Cast, Ductile, Nodular*	600 - 1000	.003 - .004
Nickel & Titanium Alloy *Ex. Inconel, Hastelloy, TI-6AL-4V*	100 - 180	.001 - .002

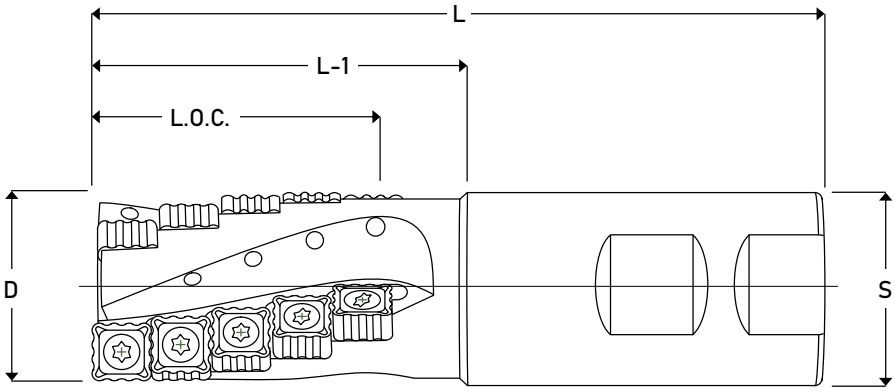

Tool Info.

Tool #	D	Flutes	Inserts	L	L-1	L.O.C.	S	Inserts	Screw	Wrench
S-100S	.985	2-1 Effective	4	3.125	1.125	.780	.750	SNMC-333B SNMC-332P	538T	T-10
S-100M	.985	2-1 Effective	6	3.625	1.375	1.125	1.000			
S-100	.985	2-1 Effective	8	4.000	1.750	1.500	1.000			
S-125S	1.235	3-1.5 Effective	9	3.750	1.500	1.125	1.000			
S-125	1.235	3-1.5 Effective	15	4.625	2.375	1.900	1.250			
S-125L	1.235	2-1 Effective	16	5.625	3.375	3.062	1.250			
S-150S	1.485	3-1.5 Effective	9	3.875	1.625	1.125	1.000			
S-150	1.485	3-1.5 Effective	18	4.875	2.500	2.250	1.250			
S-150L	1.485	3-1.5 Effective	33	7.250	4.625	4.200	1.500			

Positive Top Insert

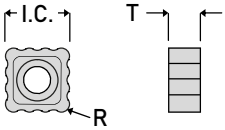

Insert Info.

Insert #	I.C.	T	R	Grade
SNMC-333B	.375	.187	.047	K11

Positive Top Insert

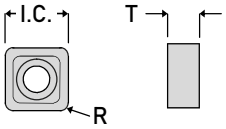

Insert Info.

Insert #	I.C.	T	R	Grade
SNMC-332P	.375	.187	.031	K11

IMPORTANT

High Pressure Flood Coolant or Air Blast Required to Disperse Chip and Cool the Tool

Recutting Chips Will Cause Early Insert Failure

Speed and Feed Info.

Material	S.F.M.	I.P.T.
Mild & Low Carbon Steel *Ex. 1018, 1020, 1117, 1141, 12L14*	600 - 1200	.002 - .006
High Carbon & Alloy Steel *Ex. 1045, 4140, 4340, 52100, 8620*	500 - 800	.002 - .004
Lower Carbon Tool Steel *Ex. P-20, H-13, S-7*	400 - 700	.002 - .004
Tool Steel *Ex. A-2, A-6, D-2, M-2*	300 - 600	.002 - .004
Stainless Steel *Ex. 304, 316, 420, 15-5PH, 17-4PH*	300 - 600	.002 - .004
Iron *Ex. Cast, Ductile, Nodular*	600 - 1000	.003 - .006
Nickel & Titanium Alloy *Ex. Inconel, Hastelloy, TI-6AL-4V*	100 - 180	.001 - .003

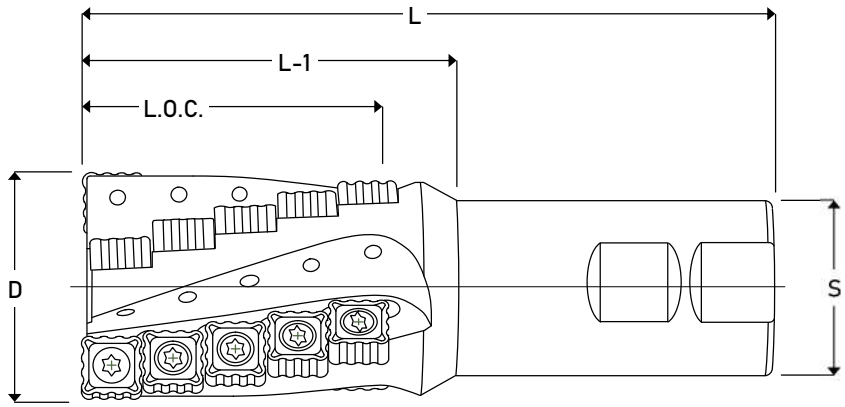

Tool Info.										
Tool #	D	Flutes	Inserts	L	L-1	L.O.C.	S	Inserts	Screw	Wrench
S-200	1.980	4-2 Effective	20	5.750	3.125	2.550	1.500	SNMC-444B SNGC-444H SNMC-443P	838T	T-20

Positive Top Insert

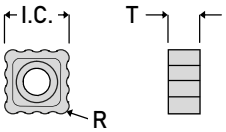

Insert Info.				
Insert #	I.C.	T	R	Grade
SNMC-444B	.500	.250	.062	K11

Positive Top Insert

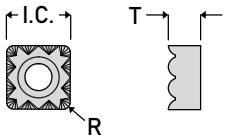

Insert Info.				
Insert #	I.C.	T	R	Grade
SNGC-444H	.500	.250	.062	K11

Positive Top Insert

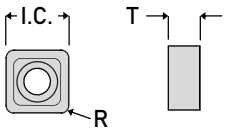

Insert Info.				
Insert #	I.C.	T	R	Grades
SNMC-443P	.500	.250	.047	D66 K11

IMPORTANT

High Pressure Flood Coolant or Air Blast Required to Disperse Chip and Cool the Tool

Recutting Chips Will Cause Early Insert Failure

Speed and Feed Info.		
Material	S.F.M.	I.P.T.
Mild & Low Carbon Steel *Ex. 1018, 1020, 1117, 1141, 12L14*	600 - 1200	.002 - .006
High Carbon & Alloy Steel *Ex. 1045, 4140, 4340, 52100, 8620*	500 - 800	.002 - .004
Lower Carbon Tool Steel *Ex. P-20, H-13, S-7*	400 - 700	.002 - .004
Tool Steel *Ex. A-2, A-6, D-2, M-2*	300 - 600	.002 - .004
Stainless Steel *Ex. 304, 316, 420, 15-5PH, 17-4PH*	300 - 600	.002 - .004
Iron *Ex. Cast, Ductile, Nodular*	600 - 1000	.003 - .006
Nickel & Titanium Alloy *Ex. Inconel, Hastelloy, TI-6AL-4V*	100 - 180	.001 - .003

Shell Mount

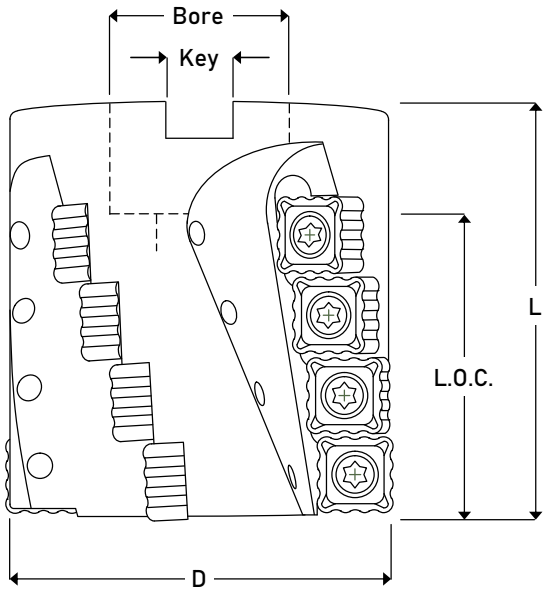

Tool Info.

Tool #	D	Flutes	Inserts	L	L.O.C.	Bore	Key	Inserts	Screw	Wrench
S-200S	1.980	4-2 Effective	16	2.000	1.500	.750	.312	SNMC-333B SNMC-332P	538T	T-10
S-250S	2.480	4-2 Effective	16	2.625	2.000	1.250	.500	SNMC-444B SNGC-444H SNMC-443P	838T	T-20
S-300S	2.980	4-2 Effective	20	3.250	2.500	1.500	.625		838T	T-20
S-400S	3.980	6-3 Effective	30	3.290	2.500	1.500	.625		838T	T-20

Positive Top Inserts

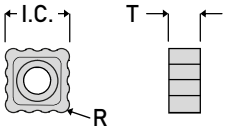

Insert #	I.C.	T	R	Grade
SNMC-333B	.375	.187	.047	K11
SNMC-444B	.500	.250	.062	K11

Positive Top Inserts

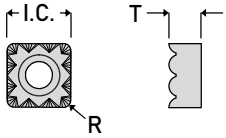

Insert #	I.C.	T	R	Grade
SNGC-333H	.375	.187	.047	K11
SNGC-444H	.500	.250	.062	K11

Positive Top Inserts

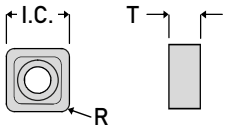

Insert #	I.C.	T	R	Grades
SNMC-332P	.375	.187	.031	K11
SNMC-443P	.500	.250	.047	D66 K11

IMPORTANT

High Pressure Flood Coolant or Air Blast Required to Disperse Chip and Cool the Tool

Recutting Chips Will Cause Early Insert Failure

Speed and Feed Info.

Material	S.F.M.	I.P.T.
Mild & Low Carbon Steel *Ex. 1018, 1020, 1117, 1141, 12L14*	600 - 1200	.002 - .006
High Carbon & Alloy Steel *Ex. 1045, 4140, 4340, 52100, 8620*	500 - 800	.002 - .004
Lower Carbon Tool Steel *Ex. P-20, H-13, S-7*	400 - 700	.002 - .004
Tool Steel *Ex. A-2, A-6, D-2, M-2*	300 - 600	.002 - .004
Stainless Steel *Ex. 304, 316, 420, 15-5PH, 17-4PH*	300 - 600	.002 - .004
Iron *Ex. Cast, Ductile, Nodular*	600 - 1000	.003 - .006
Nickel & Titanium Alloy *Ex. Inconel, Hastelloy, TI-6AL-4V*	100 - 180	.001 - .003

K-Tool, Inc.

Integral

V50

Serators

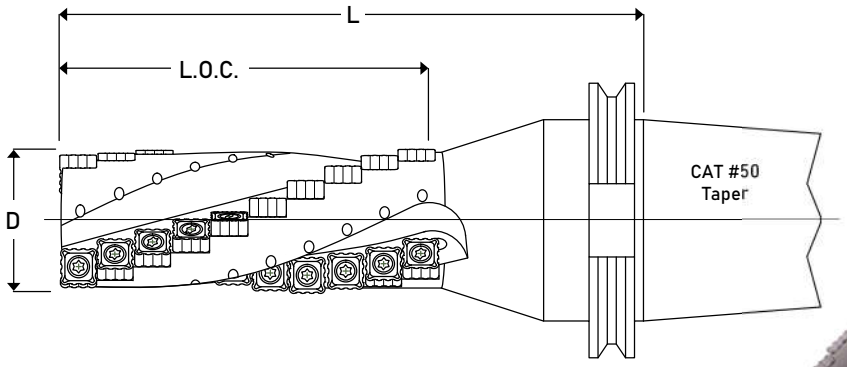

Tool Info.

Tool #	D	Flutes	Inserts	L	L.O.C.	Inserts	Screw	Wrench
V50-203	1.980	4-2 Effective	28	6.000	3.600	SNMC-444B SNGC-444H SNMC-443P	838T	T-20
V50-205	1.980	3-1.5 Effective	30	8.000	5.100			
V50-253	2.480	4-2 Effective	28	6.000	3.600			
V50-256	2.480	4-2 Effective	48	8.000	6.100			
V50-303	2.980	4-2 Effective	28	6.000	3.600			
V50-306	2.980	4-2 Effective	48	8.000	6.100			

Positive Top Insert

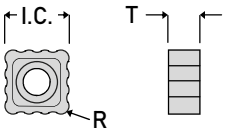

Insert #	I.C.	T	R	Grade
SNMC-444B	.500	.250	.062	K11

Positive Top Insert

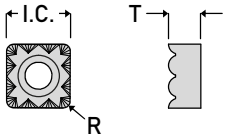

Insert #	I.C.	T	R	Grade
SNGC-444H	.500	.250	.062	K11

Positive Top Insert

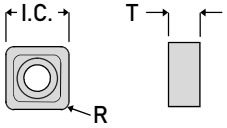

Insert #	I.C.	T	R	Grades
SNMC-443P	.500	.250	.047	D66 K11

IMPORTANT

High Pressure Flood Coolant or Air Blast Required to Disperse Chip and Cool the Tool

Recutting Chips Will Cause Early Insert Failure

Speed and Feed Info.

Material	S.F.M.	I.P.T.
Mild & Low Carbon Steel *Ex. 1018, 1020, 1117, 1141, 12L14*	600 - 1200	.002 - .006
High Carbon & Alloy Steel *Ex. 1045, 4140, 4340, 52100, 8620*	500 - 800	.002 - .004
Lower Carbon Tool Steel *Ex. P-20, H-13, S-7*	400 - 700	.002 - .004
Tool Steel *Ex. A-2, A-6, D-2, M-2*	300 - 600	.002 - .004
Stainless Steel *Ex. 304, 316, 420, 15-5PH, 17-4PH*	300 - 600	.002 - .004
Iron *Ex. Cast, Ductile, Nodular*	600 - 1000	.003 - .006
Nickel & Titanium Alloy *Ex. Inconel, Hastelloy, TI-6AL-4V*	100 - 180	.001 - .003

Sera-Mill

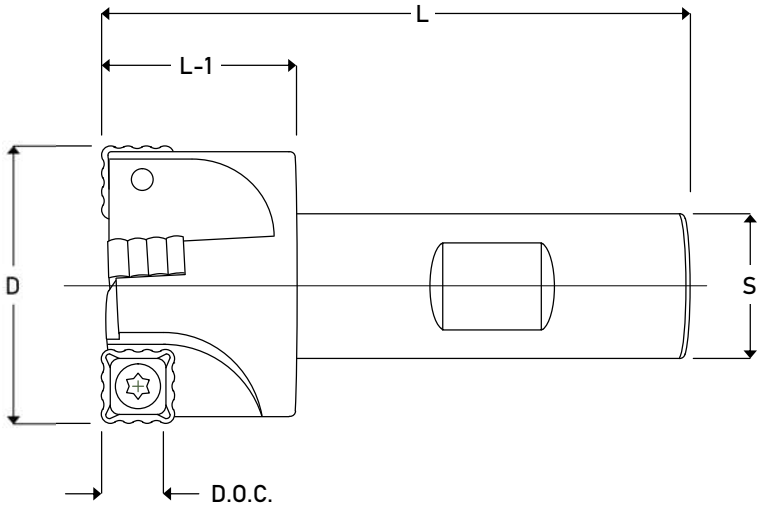

Tool Info.

Tool #	D	Flutes	Inserts	L	L-1	D.O.C.	S	Inserts	Screw	Wrench
SM-100	.990	2-1 Effective	2	3.000	1.000	.370	.750	SNMC-333B SNMC-333H	538T	T-10
SM-125	1.240	3-1.5 Effective	3	3.000	1.000	.370	.750			
SM-150	1.490	4-2 Effective	4	3.000	1.000	.370	.750			
SM-200	1.990	6-3 Effective	6	3.000	1.000	.370	.750			

For Larger Diameters, Refer to Universal Mills on Page 127

Positive Top Insert

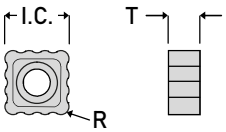

Insert #	I.C.	T	R	Grade
SNMC-333B	.375	.187	.047	K11

Positive Top Insert

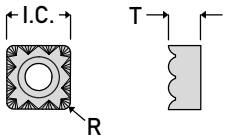

Insert #	I.C.	T	R	Grade
SNGC-333H	.375	.187	.047	K11

IMPORTANT

High Pressure Flood Coolant or Air Blast Required to Disperse Chip and Cool the Tool

Recutting Chips Will Cause Early Insert Failure

Speed and Feed Info.

Material	S.F.M.	I.P.T.
Mild & Low Carbon Steel *Ex. 1018, 1020, 1117, 1141, 12L14*	600 - 1200	.002 - .006
High Carbon & Alloy Steel *Ex. 1045, 4140, 4340, 52100, 8620*	500 - 800	.002 - .004
Lower Carbon Tool Steel *Ex. P-20, H-13, S-7*	400 - 700	.002 - .004
Tool Steel *Ex. A-2, A-6, D-2, M-2*	300 - 600	.002 - .004
Stainless Steel *Ex. 304, 316, 420, 15-5PH, 17-4PH*	300 - 600	.002 - .004
Iron *Ex. Cast, Ductile, Nodular*	600 - 1000	.003 - .006
Nickel & Titanium Alloy *Ex. Inconel, Hastelloy, TI-6AL-4V*	100 - 180	.001 - .003

Super Alloy Mills

High Positive & Cuts 90° Shoulder
4 Cutting Edges Per Insert
Multi Flute & Extended Version Available
Available in Shank Style & Shell Mount

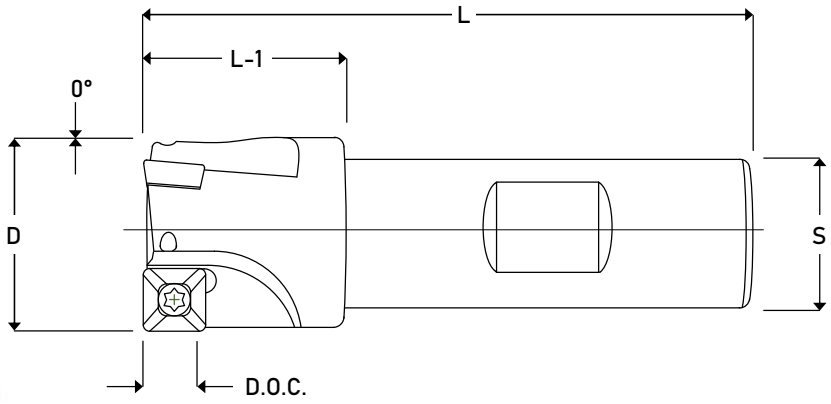

Tool Info.

Tool #	D	Flutes	L	L-1	D.O.C.	S	Insert	Screw	Wrench
SA-375	.375	1	2.250	.625	.235	.375	SDEB-2151P	300T	T-8
SA-500	.500	1	2.625	.625	.215	.500	SPEB-222P	300T	T-8
SA-625	.625	2	3.000	.875	.215	.625	SPEB-222P	314T	T-8
SA-750	.750	2	3.000	1.000	.280	.750	SPEB-2522P	314T	T-8
SA-100	1.000	3	3.000	1.000	.280	.750	SPEB-2522P	314T	T-8
SA-125	1.250	3	3.250	1.250	.340	.750	SPEB-332P	538T	T-10
SA-125HS	1.250	2	3.500	1.250	.465	1.000	SPEB-432PA	638T	T-15
SA-150	1.500	3	3.250	1.250	.340	.750	SPEB-332P	538T	T-10
SA-150HS	1.500	3	3.500	1.250	.465	1.000	SPEB-432PA	638T	T-15
SA-200	2.000	4	3.250	1.250	.340	.750	SPEB-332P	538T	T-10

Positive Top Inserts

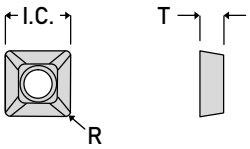

Insert Info.

Insert #	I.C.	T	R	Grades
SDEB-2151P	.250	.093	.015	K11
SPEB-222P	.250	.125	.031	B1M D66 K11 K22
SPEB-2522P	.312	.125	.031	B1M D66 K11 K22
SPEB-332P	.375	.187	.031	B1M D66 K11 K22
SPEB-432PA	.500	.187	.031	B1M D66 K11 K22

Speed and Feed Info.

Material	S.F.M.	.375-.500 Dia. I.P.T.	.625-2.000 Dia. I.P.T.
Mild & Low Carbon Steel *Ex. 1018, 1020, 1117, 1141, 12L14*	800 - 1200	.002 - .003	.002 - .005
High Carbon & Alloy Steel *Ex. 1045, 4140, 4340, 52100, 8620*	500 - 800	.002 - .003	.002 - .004
Lower Carbon Tool Steel *Ex. P-20, H-13, S-7*	400 - 700	.002 - .003	.002 - .004
Tool Steel *Ex. A-2, A-6, D-2, M-2*	300 - 600	.001 - .003	.002 - .004
Stainless Steel *Ex. 304, 316, 420, 15-5PH, 17-4PH*	300 - 600	.002 - .003	.002 - .004
Iron *Ex. Cast, Ductile, Nodular*	600 - 1000	.002 - .003	.002 - .005
Nickel & Titanium Alloy *Ex. Inconel, Hastelloy, TI-6AL-4V*	120 - 180	.001 - .002	.001 - .003
Non-Ferrous Metal *Ex. Aluminum, Bronze, Brass*	1000 - 2500	.002 - .003	.002 - .006

Multi Flute

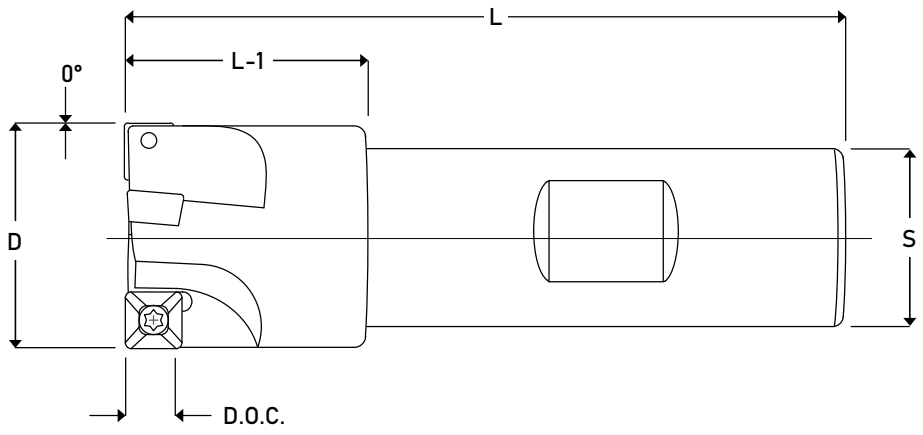

Tool Info.

Tool #	D	Flutes	L	L-1	D.O.C.	S	Insert	Screw	Wrench
SA-750MF	.750	3	3.000	1.000	.215	.750	SPEB-222P	314T	T-8
SA-100MF	1.000	4	3.000	1.000	.215	.750	SPEB-222P	314T	T-8
SA-125MF	1.250	4	3.250	1.250	.280	.750	SPEB-2522P	314T	T-8
SA-150MF	1.500	5	3.250	1.250	.280	.750	SPEB-2522P	314T	T-8
SA-200MF	2.000	6	3.250	1.250	.280	.750	SPEB-2522P	314T	T-8

Positive Top Inserts

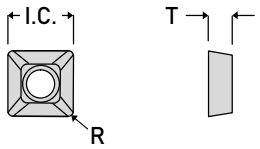

Insert Info.

Insert #	I.C.	T	R	Grades
SPEB-222P	.250	.125	.031	B1M D66 K11 K22
SPEB-2522P	.312	.125	.031	B1M D66 K11 K22

Speed and Feed Info.

Material	S.F.M.	I.P.T.
Mild & Low Carbon Steel *Ex. 1018, 1020, 1117, 1141, 12L14*	800 - 1200	.002 - .005
High Carbon & Alloy Steel *Ex. 1045, 4140, 4340, 52100, 8620*	500 - 800	.002 - .004
Lower Carbon Tool Steel *Ex. P-20, H-13, S-7*	400 - 700	.002 - .004
Tool Steel *Ex. A-2, A-6, D-2, M-2*	300 - 600	.002 - .004
Stainless Steel *Ex. 304, 316, 420, 15-5PH, 17-4PH*	300 - 600	.002 - .004
Iron *Ex. Cast, Ductile, Nodular*	600 - 1000	.002 - .005
Nickel & Titanium Alloy *Ex. Inconel, Hastelloy, TI-6AL-4V*	120 - 180	.001 - .003
Non-Ferrous Metal *Ex. Aluminum, Bronze, Brass*	1000 - 2500	.002 - .006

Extended Reach

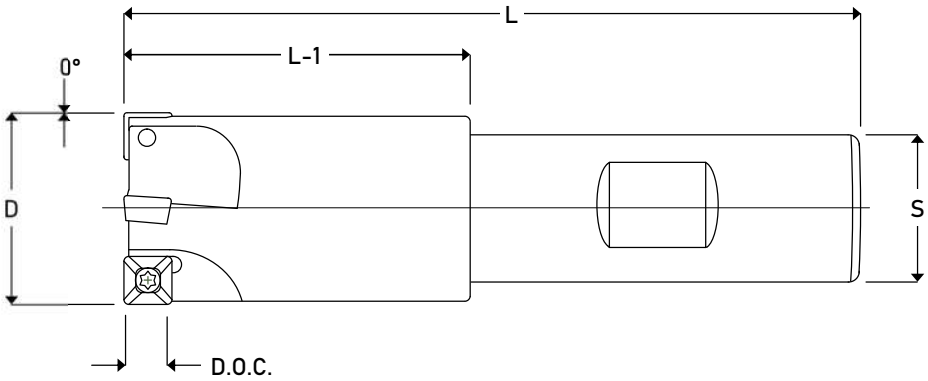

Tool Info.

Tool #	D	Flutes	L	L-1	D.O.C.	S	Insert	Screw	Wrench
SAL-750MF	.750	3	3.500	1.500	.215	.750	SPEB-222P	314T	T-8
SAL-100MF	1.000	4	3.750	1.750	.215	.750	SPEB-222P	314T	T-8
SAL-125MF	1.250	4	4.000	2.000	.280	.750	SPEB-2522P	314T	T-8
SAL-150MF	1.500	5	4.250	2.000	.280	1.000	SPEB-2522P	314T	T-8
SAL-200MF	2.000	6	4.500	2.250	.280	1.000	SPEB-2522P	314T	T-8

Positive Top Inserts

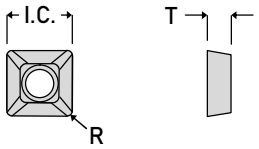

Insert Info.

Insert #	I.C.	T	R	Grades
SPEB-222P	.250	.125	.031	B1M D66 K11 K22
SPEB-2522P	.312	.125	.031	B1M D66 K11 K22

Speed and Feed Info.

Material	S.F.M.	I.P.T.
Mild & Low Carbon Steel *Ex. 1018, 1020, 1117, 1141, 12L14*	800 - 1200	.002 - .005
High Carbon & Alloy Steel *Ex. 1045, 4140, 4340, 52100, 8620*	500 - 800	.002 - .004
Lower Carbon Tool Steel *Ex. P-20, H-13, S-7*	400 - 700	.002 - .004
Tool Steel *Ex. A-2, A-6, D-2, M-2*	300 - 600	.002 - .004
Stainless Steel *Ex. 304, 316, 420, 15-5PH, 17-4PH*	300 - 600	.002 - .004
Iron *Ex. Cast, Ductile, Nodular*	600 - 1000	.002 - .005
Nickel & Titanium Alloy *Ex. Inconel, Hastelloy, TI-6AL-4V*	120 - 180	.001 - .003
Non-Ferrous Metal *Ex. Aluminum, Bronze, Brass*	1000 - 2500	.002 - .006

K-Tool, Inc.

Shell Mount

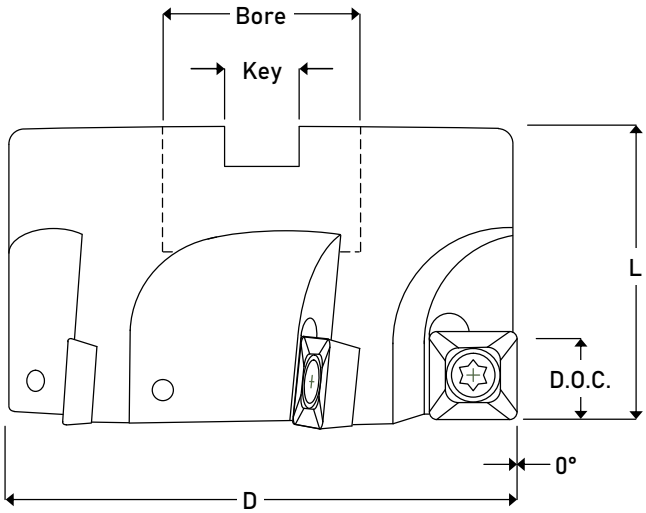

Tool Info.

Tool #	D	Flutes	L	D.O.C.	Bore	Key	Insert	Screw	Wrench
SA-2000	2.000	4	1.500	.465	.750	.312			
SA-2500	2.500	5	1.625	.465	1.000	.375	SPEB-432PA	638T	T-15
SA-3000	3.000	6	1.625	.465	1.000	.375			

For Larger Diameters, Refer to Universal Mills on Page 127

Positive Top Inserts

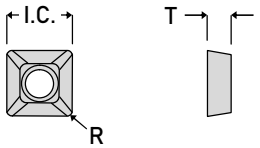

Insert Info.

Insert #	I.C.	T	R	Grades
SPEB-432PA	.500	.187	.031	B1M D66 K11 K22

Speed and Feed Info.

Material	S.F.M.	I.P.T.
Mild & Low Carbon Steel *Ex. 1018, 1020, 1117, 1141, 12L14*	800 - 1200	.002 - .005
High Carbon & Alloy Steel *Ex. 1045, 4140, 4340, 52100, 8620*	500 - 800	.002 - .004
Lower Carbon Tool Steel *Ex. P-20, H-13, S-7*	400 - 700	.002 - .004
Tool Steel *Ex. A-2, A-6, D-2, M-2*	300 - 600	.002 - .004
Stainless Steel *Ex. 304, 316, 420, 15-5PH, 17-4PH*	300 - 600	.002 - .004
Iron *Ex. Cast, Ductile, Nodular*	600 - 1000	.002 - .005
Nickel & Titanium Alloy *Ex. Inconel, Hastelloy, TI-6AL-4V*	120 - 180	.001 - .003
Non-Ferrous Metal *Ex. Aluminum, Bronze, Brass*	1000 - 2500	.002 - .006

Eight Square Positive Mills

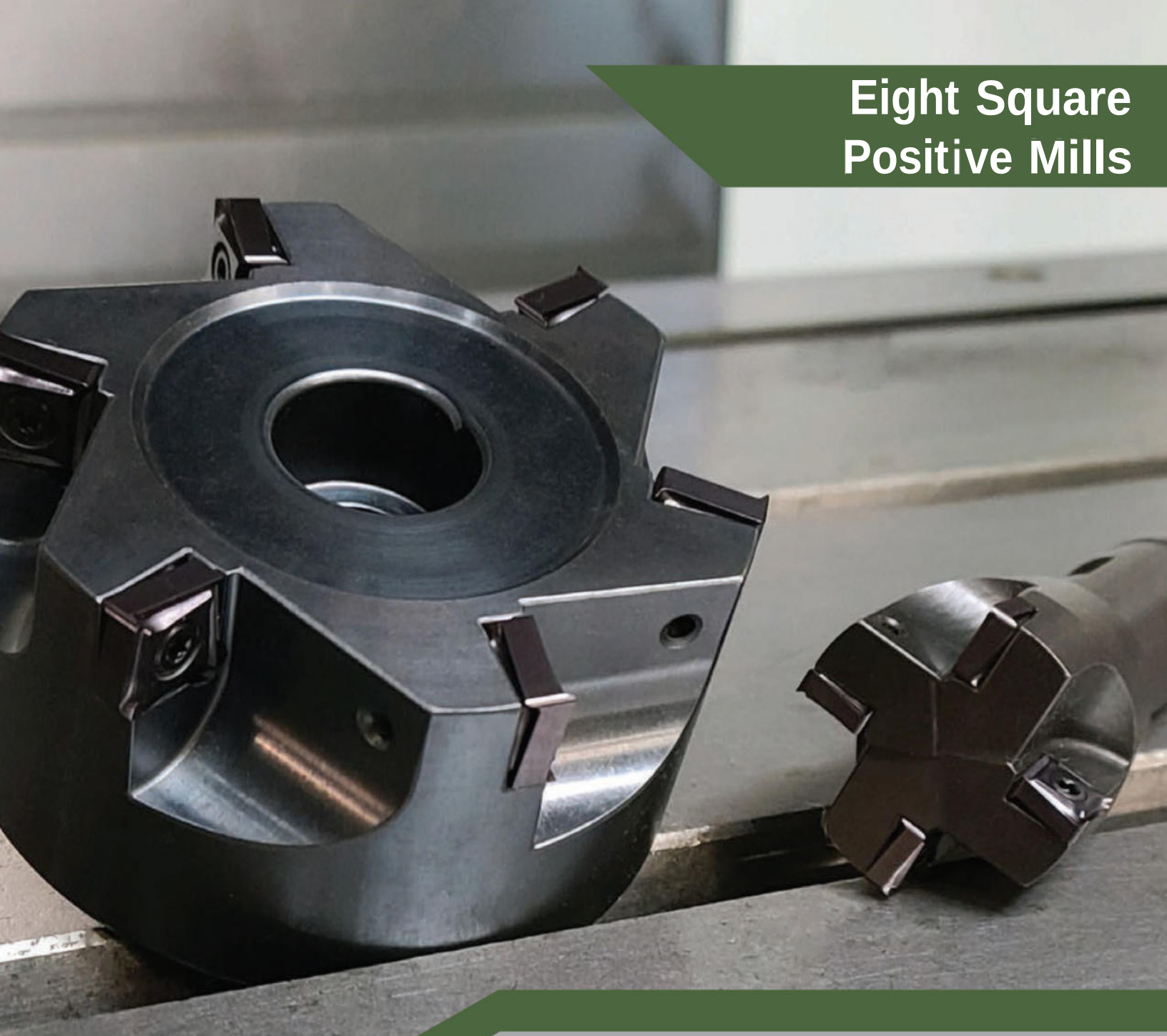

Cuts a Square Shoulder +/- .001
8 Cutting Edges
Strong Neutral Cutting Edge & Positive Axial Rake
Shank & Shell Mount Style-Great for Harder Materials

Shank Tools

ESP

Eight Square Positive Mills

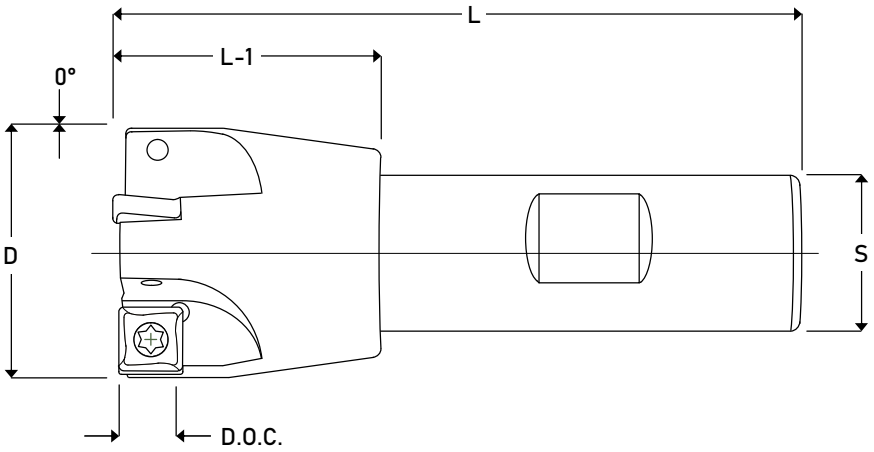

Tool Info.									
Tool #	D	Flutes	L	L-1	D.O.C.	S	Insert	Screw	Wrench
ESP-750-2	.750	2	3.000	1.000	.280	.750	SNPG-2522	314T	T-8
ESP-1000-2	1.000	3	3.000	1.000	.280	.750	SNPG-2522	314T	T-8
ESP-1250-2	1.250	4	3.250	1.250	.280	.750	SNPG-2522	314T	T-8
ESP-1500-2	1.500	5	3.250	1.250	.280	.750	SNPG-2522	314T	T-8
ESP-2000-2	2.000	6	3.250	1.250	.280	.750	SNPG-2522	314T	T-8
ESP-1500-3	1.500	3	4.000	1.750	.405	1.000	SNPG-3532	538T	T-10
ESP-2000-3	2.000	4	4.000	1.750	.405	1.000	SNPG-3532	538T	T-10

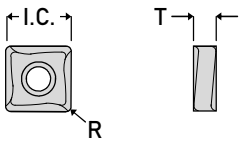

Insert Info.				
Insert #	I.C.	T	R	Grade
SNPG-2522	.312	.125	.031	K11
SNPG-3532	.437	.187	.031	K11

Speed and Feed Info.		
Material	S.F.M.	I.P.T.
Mild & Low Carbon Steel *Ex. 1018, 1020, 1117, 1141, 12L14*	800 - 1200	.003 - .006
High Carbon & Alloy Steel *Ex. 1045, 4140, 4340, 52100, 8620*	500 - 800	.003 - .005
Lower Carbon Tool Steel *Ex. P-20, H-13, S-7*	400 - 700	.003 - .005
Tool Steel *Ex. A-2, A-6, D-2, M-2*	300 - 600	.003 - .005
Stainless Steel *Ex. 304, 316, 420, 15-5PH, 17-4PH*	300 - 600	.003 - .005
Iron *Ex. Cast, Ductile, Nodular*	600 - 1000	.003 - .006
Nickel & Titanium Alloy *Ex. Inconel, Hastelloy, TI-6AL-4V*	120 - 180	.001 - .003
Non-Ferrous Metal *Ex. Aluminum, Bronze, Brass*	1000 - 2500	.003 - .007

Shell Mount

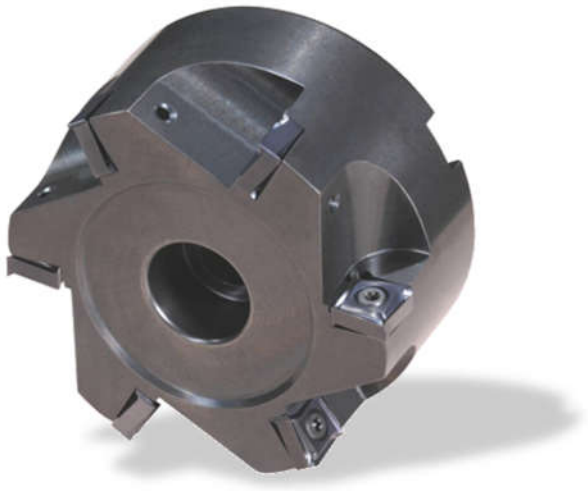

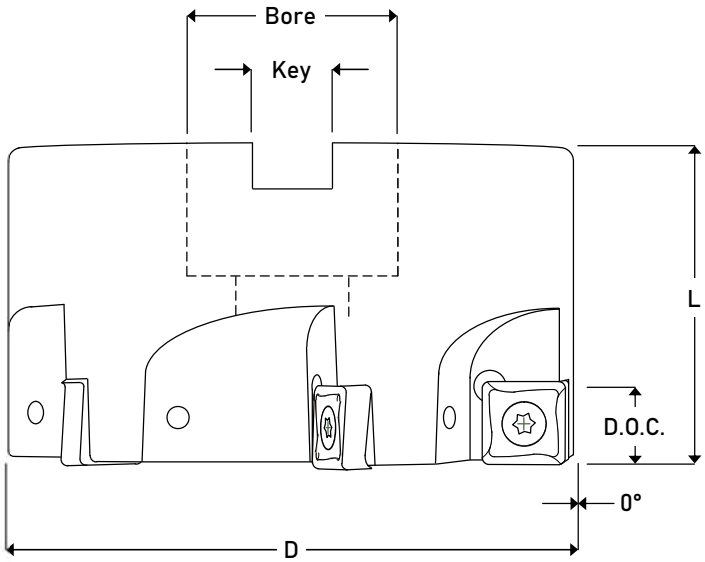

Tool Info.

Tool #	D	Flutes	L	D.O.C.	Bore	Key	Insert	Screw	Wrench
ESPS-2000-3	2.000	4	1.500	.405	.750	.312			
ESPS-2500-3	2.500	6	1.625	.405	1.000	.375	SNPG-3532	538T	T-10
ESPS-3000-3	3.000	6	1.625	.405	1.000	.375			

For Larger Diameters, Refer to Universal Mills on Page 127

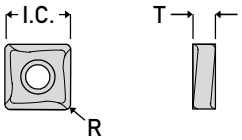

Insert Info.

Insert #	I.C.	T	R	Grade
SNPG-3532	.437	.187	.031	K11

Speed and Feed Info.

Material	S.F.M.	I.P.T.
Mild & Low Carbon Steel *Ex. 1018, 1020, 1117, 1141, 12L14*	800 - 1200	.003 - .006
High Carbon & Alloy Steel *Ex. 1045, 4140, 4340, 52100, 8620*	500 - 800	.003 - .005
Lower Carbon Tool Steel *Ex. P-20, H-13, S-7*	400 - 700	.003 - .005
Tool Steel *Ex. A-2, A-6, D-2, M-2*	300 - 600	.003 - .005
Stainless Steel *Ex. 304, 316, 420, 15-5PH, 17-4PH*	300 - 600	.003 - .005
Iron *Ex. Cast, Ductile, Nodular*	600 - 1000	.003 - .006
Nickel & Titanium Alloy *Ex. Inconel, Hastelloy, TI-6AL-4V*	120 - 180	.001 - .003
Non-Ferrous Metal *Ex. Aluminum, Bronze, Brass*	1000 - 2500	.003 - .007

Stockbusters

Long Edge Roughing Mill
Offset Inserts to Reduce Tool Pressure
Available in Shank or CAT-50 Taper

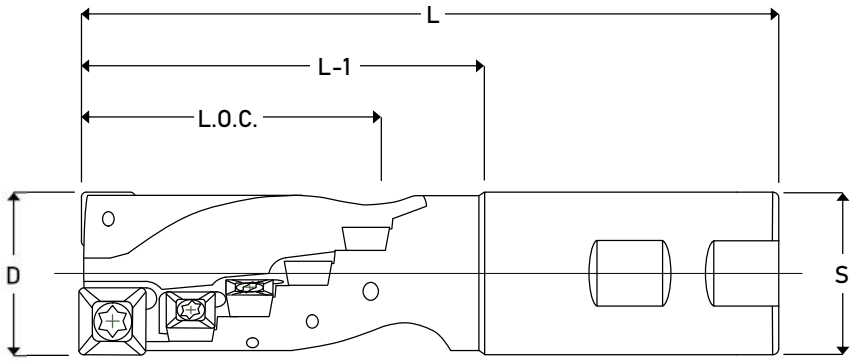

Tool Info.

Tool #	D	Inserts	Flutes	L	L-1	L.O.C.	S	Inserts	Screw	Wrench
SB-100	1.000	10	2-1 Effective	4.125	1.875	1.500	1.000	(1) SPEB-322P (9) SPEB-222P	414T 314T	T-10 T-8
SB-125	1.250	11	2-1 Effective	5.250	3.000	2.500	1.250	(1) SPEB-432PA (10) SPEB-332P	638T 538T	T-15 T-10
SB-150	1.500	17	3-1.5 Effective	5.250	3.000	2.500	1.250	(1) SPEB-432PA (16) SPEB-332P	638T 538T	T-15 T-10
SB-202	2.000	22	4-2 Effective	5.690	3.000	2.500	1.500	(2) SPEB-432PA (20) SPEB-332P	638T 538T	T-15 T-10

Positive Top Inserts

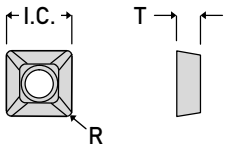

Insert Info.

Insert #	I.C.	T	R	Grades
SPEB-222P	.250	.125	.031	B1M D66 K11 K22
SPEB-322P	.375	.125	.031	B1M D66 K11 K22
SPEB-332P	.375	.187	.031	B1M D66 K11 K22
SPEB-432PA	.500	.187	.031	B1M D66 K11 K22

Speed and Feed Info.

Material	S.F.M.	I.P.T.
Mild & Low Carbon Steel *Ex. 1018, 1020, 1117, 1141, 12L14*	400 - 800	.002 - .006
High Carbon & Alloy Steel *Ex. 1045, 4140, 4340, 52100, 8620*	300 - 500	.002 - .005
Lower Carbon Tool Steel *Ex. P-20, H-13, S-7*	300 - 500	.002 - .005
Tool Steel *Ex. A-2, A-6, D-2, M-2*	300 - 500	.002 - .004
Stainless Steel *Ex. 304, 316, 420, 15-5PH, 17-4PH*	300 - 500	.002 - .004
Iron *Ex. Cast, Ductile, Nodular*	400 - 800	.003 - .007
Nickel & Titanium Alloy *Ex. Inconel, Hastelloy, TI-6AL-4V*	100 - 200	.001 - .003
Non-Ferrous Metal *Ex. Aluminum, Bronze, Brass*	800 - 1200	.003 - .007

K-Tool, Inc.

Integral

SB

Stockbusters

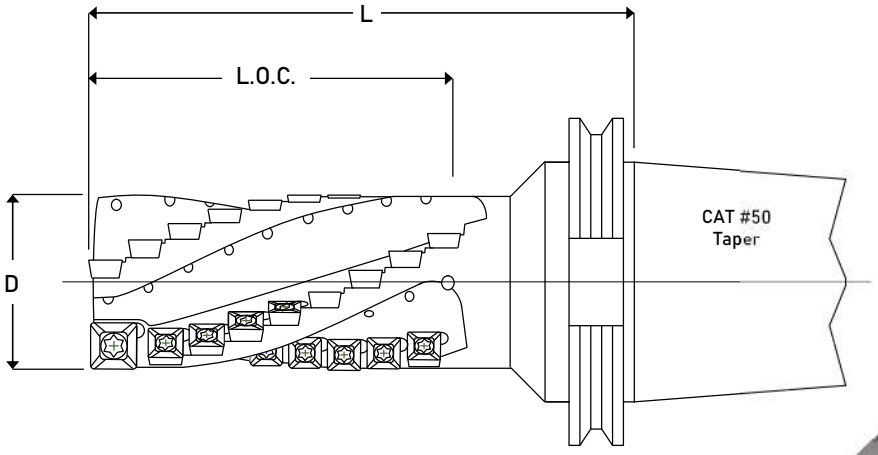

Tool Info.

Tool #	D	Inserts	Flutes	L	L.O.C.	Inserts	Screw	Wrench
V50-204SB	2.000	36	4-2 Effective	6.000	4.000	(2) SPEB-432PA (34) SPEB-332P	638T 538T	T-15 T-10

Positive Top Inserts

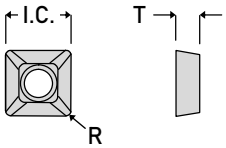

Insert Info.

Insert #	I.C.	T	R	Grades
SPEB-332P	.375	.187	.031	B1M D66 K11 K22
SPEB-432PA	.500	.187	.031	B1M D66 K11 K22

Speed and Feed Info.

Material	S.F.M.	I.P.T.
Mild & Low Carbon Steel *Ex. 1018, 1020, 1117, 1141, 12L14*	400 - 800	.002 - .006
High Carbon & Alloy Steel *Ex. 1045, 4140, 4340, 52100, 8620*	300 - 500	.002 - .005
Lower Carbon Tool Steel *Ex. P-20, H-13, S-7*	300 - 500	.002 - .005
Tool Steel *Ex. A-2, A-6, D-2, M-2*	300 - 500	.002 - .004
Stainless Steel *Ex. 304, 316, 420, 15-5PH, 17-4PH*	300 - 500	.002 - .004
Iron *Ex. Cast, Ductile, Nodular*	400 - 800	.003 - .007
Nickel & Titanium Alloy *Ex. Inconel, Hastelloy, TI-6AL-4V*	100 - 200	.001 - .003
Non-Ferrous Metal *Ex. Aluminum, Bronze, Brass*	800 - 1200	.003 - .007

Universal Mills

Multiple Cartridge Options
Covers Wide Range Of Applications

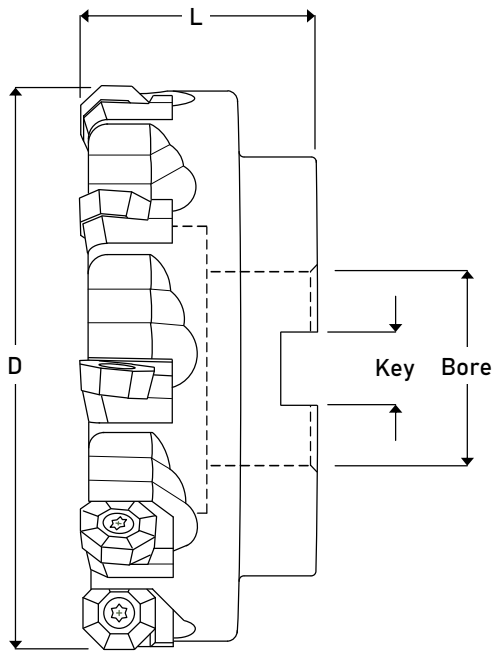

Tool Info.

Tool #	D	Flutes	L	Bore	Key	Cartridge Screw	Allen Wrench	Adjustment Screw
UM-408	4.000	8	1.875	1.250	.500			
UM-510	5.000	10	2.000	1.500	.625			
UM-612	6.000	12	2.000	1.500	.625	142878	3/16"	1/4-28 x 3/8"
UM-816	8.000	16	2.250	2.500 With 4 Bolt Hole Pattern	1.000			
UM-1020	10.000	20	2.250		1.000			

Speed and Feed Info.

Material	S.F.M.	I.P.T.
Mild & Low Carbon Steel *Ex. 1018, 1020, 1117, 1141, 12L14*	800 - 1200	.002 - .006
High Carbon & Alloy Steel *Ex. 1045, 4140, 4340, 52100, 8620*	500 - 800	.002 - .005
Lower Carbon Tool Steel *Ex. P-20, H-13, S-7*	400 - 700	.002 - .005
Tool Steel *Ex. A-2, A-6, D-2, M-2*	300 - 600	.002 - .004
Stainless Steel *Ex. 304, 316, 420, 15-5PH, 17-4PH*	300 - 600	.002 - .004
Iron *Ex. Cast, Ductile, Nodular*	600 - 1000	.003 - .007
Nickel & Titanium Alloy *Ex. Inconel, Hastelloy, TI-6AL-4V*	120 - 180	.001 - .003
Non-Ferrous Metal *Ex. Aluminum, Bronze, Brass*	1000 - 2500	.003 - .007

NOTE:
SERA Cartridge A & B
must alternate every other pocket.

OCTA Cartridge

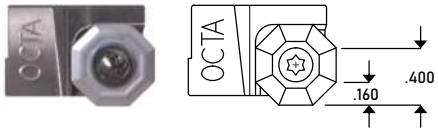

Insert - OPEB-535 / RPEB-535	
See Page 11 For More Info.	
Insert Screw	838T
Wrench	T-20

OCTA Wiper Cartridge

OPEB-535	
See Page 11 For More Info.	
Insert Screw	838T
Wrench	T-20

SERA Cartridge A & B

Insert - SNMC-444B / SNGC-444H	
See Page 13 For More Info.	
Insert Screw	838T
Wrench	T-20

Super Alloy Cartridge

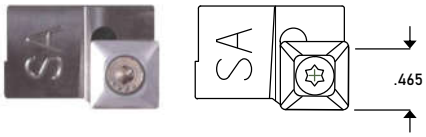

Insert - SNEB-432PA	
See Page 13 For More Info.	
Insert Screw	638T
Wrench	T-15

DOC Cartridge

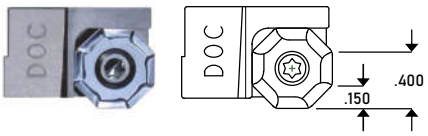

Insert - ONPG-4532	
See Page 11 For More Info.	
Insert Screw	838T
Wrench	T-20

Radius Cartridge

Insert - MGH-530 SERIES	
See Page 11 For More Info.	
Insert Screw	560T
Wrench	T-10

ESP Cartridge

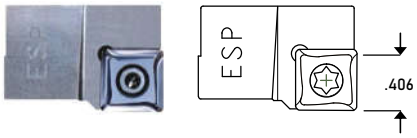

Insert - SNPG-3532	
See Page 13 For More Info.	
Insert Screw	538T
Wrench	T-10

Keli Cartridge

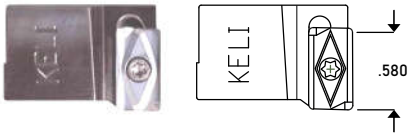

Insert - LPMT-52-532 / 533 / 534	
See Page 10 For More Info.	
Insert Screw	560T
Wrench	T-10

30° Cartridge

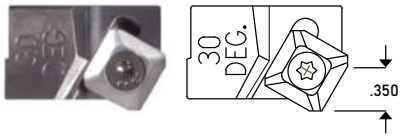

Insert - SPEB-43-30PA	
See Page 14 For More Info.	
Insert Screw	638T
Wrench	T-15

T-Slot & Key Cutters

Available in Multiple Widths
Offset Inserts for Reduced Cutting Pressure

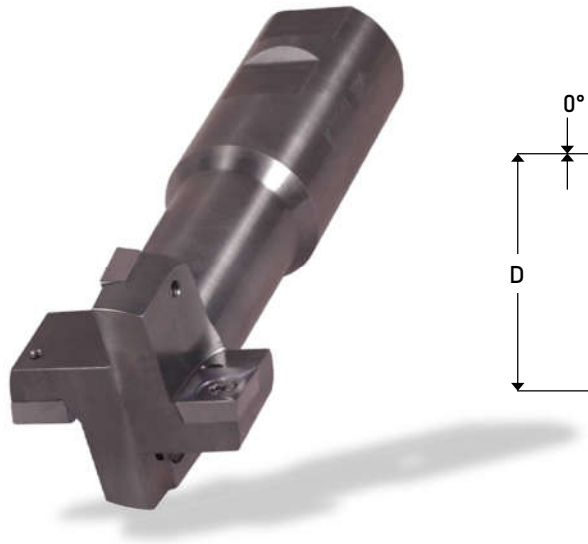

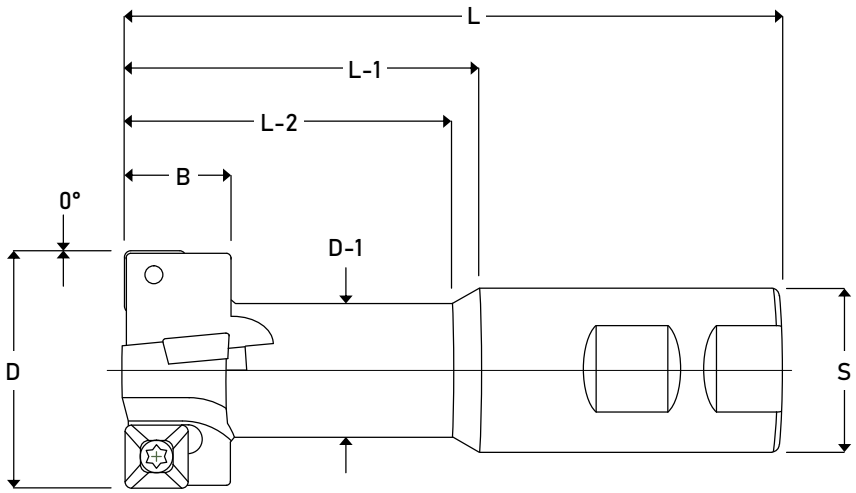

Tool Info.

Tool #	D	D-1	B	Flutes	L	L-1	L-2	S	Insert	Screw	Wrench
TS-656	.656	.328	.266	2 / 1 Eff.	2.688	.938	.812	.500	SPEB-1511CB	164T	T-6
TS-781	.781	.406	.328	4 / 2 Eff.	3.250	1.250	1.062	.750	SPEB-1511CB	164T	T-6
TS-968	.968	.531	.390	2 / 1 Eff.	3.531	1.531	1.406	.750	SPEB-222P	314T	T-8
TS-1250	1.250	.656	.484	4 / 2 Eff.	4.125	1.875	1.687	1.000	SPEB-2522P	314T	T-8
TS-1468	1.468	.781	.625	4 / 2 Eff.	4.562	2.312	2.187	1.000	SPEB-322P	438T	T-10
TS-1843	1.843	1.031	.828	4 / 2 Eff.	4.937	2.687	2.562	1.250	SPEB-432PA	638T	T-15
TS-2218	2.218	1.281	1.094	4 / 2 Eff.	5.343	3.093	N/A	1.250	SPEB-532PA	838T	T-20
TS-2656	2.656	1.531	1.343	4 / 2 Eff.	5.750	3.500	N/A	1.250	SPEB-6352PA	1012T	T-25

Positive Top Inserts

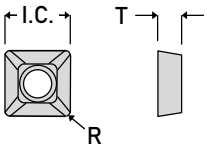

Insert Info.

Insert #	I.C.	T	R	Grades
SPEB-1511CB	.187	.082	.015	K11 K22
SPEB-222P	.250	.125	.031	B1M D66 K11 K22
SPEB-2522P	.312	.125	.031	B1M D66 K11 K22
SPEB-322P	.375	.125	.031	B1M D66 K11 K22
SPEB-432PA	.500	.187	.031	B1M D66 K11 K22
SPEB-532PA	.625	.187	.031	D66 K11 K22
SPEB-6352PA	.750	.220	.031	D66 K11 K22

Speed and Feed Info.

Material	S.F.M.	DIA. .986 to 2.656 I.P.T.	.656 & .781 I.P.T.
Mild & Low Carbon Steel *Ex. 1018, 1020, 1117, 1141, 12L14*	800 - 1200	.002 - .005	.002 - .005
High Carbon & Alloy Steel *Ex. 1045, 4140, 4340, 52100, 8620*	500 - 800	.002 - .004	.002 - .004
Lower Carbon Tool Steel *Ex. P-20, H-13, S-7*	400 - 700	.002 - .004	.002 - .004
Tool Steel *Ex. A-2, A-6, D-2, M-2*	300 - 600	.002 - .004	.002 - .004
Stainless Steel *Ex. 304, 316, 420, 15-5PH, 17-4PH*	300 - 600	.002 - .004	.002 - .004
Iron *Ex. Cast, Ductile, Nodular*	600 - 1000	.002 - .005	.002 - .005
Nickel & Titanium Alloy *Ex. Inconel, Hastelloy, TI-6AL-4V*	120 - 180	.001 - .003	.001 - .003
Non-Ferrous Metal *Ex. Aluminum, Bronze, Brass*	1000 - 2500	.002 - .006	.002 - .006

TSK

T-Slot / Key Cutters

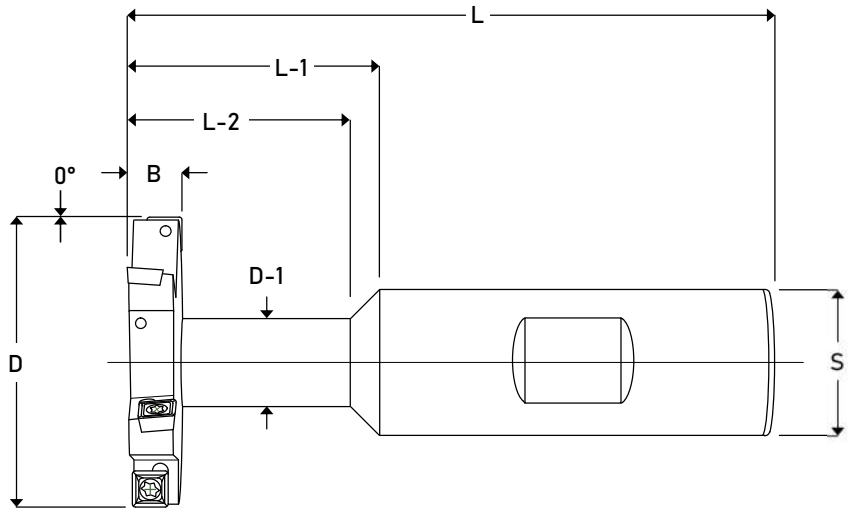

Tool Info.											
Tool #	D	D-1	B	Flutes	L	L-1	L-2	S	Insert	Screw	Wrench
TSK-7525	.750	.310	.250	4 / 2 Eff.	2.750	1.000	.900	.500	SPEB-1511CB	164T	T-6
TSK-1025	1.000	.350	.250	4 / 2 Eff.	3.250	1.250	1.050	.750			
TSK-1225	1.250	.385	.250	6 / 3 Eff.	3.250	1.250	1.065	.750			
TSK-1525	1.500	.450	.250	6 / 3 Eff.	3.250	1.250	1.100	.750			
TSK-2025	2.000	.750	.250	8 / 4 Eff.	4.000	2.000	N/A	.750			
TSK-3025	3.000	1.000	.250	8 / 4 Eff.	4.500	2.250	N/A	1.000			

Chipbreaker Insert

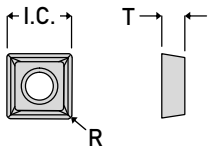

Insert Info.				
Insert #	I.C.	T	R	Grades
SPEB-1511CB	.187	.082	.015	K11 K22

Speed and Feed Info.		
Material	S.F.M.	I.P.T.
Mild & Low Carbon Steel *Ex. 1018, 1020, 1117, 1141, 12L14*	800 - 1200	.001 - .002
High Carbon & Alloy Steel *Ex. 1045, 4140, 4340, 52100, 8620*	500 - 800	.001 - .002
Lower Carbon Tool Steel *Ex. P-20, H-13, S-7*	400 - 700	.001 - .002
Tool Steel *Ex. A-2, A-6, D-2, M-2*	300 - 600	.001 - .002
Stainless Steel *Ex. 304, 316, 420, 15-5PH, 17-4PH*	300 - 600	.001 - .002
Iron *Ex. Cast, Ductile, Nodular*	600 - 1000	.001 - .002
Nickel & Titanium Alloy *Ex. Inconel, Hastelloy, TI-6AL-4V*	120 - 180	.001 - .002
Non-Ferrous Metal *Ex. Aluminum, Bronze, Brass*	1000 - 2500	.0015 - .003

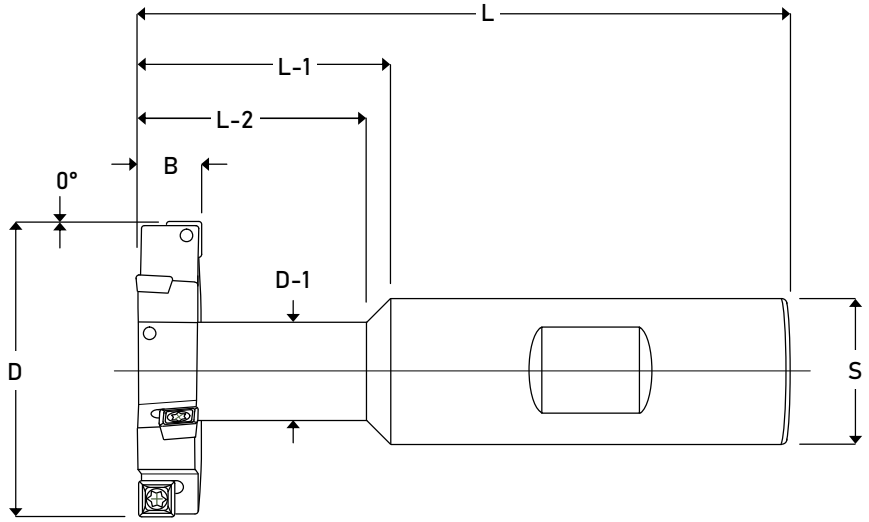

Tool Info.

Tool #	D	D-1	B	Flutes	L	L-1	L-2	S	Insert	Screw	Wrench
TSK-7531	.750	.310	.312	4 / 2 Eff.	2.750	1.000	.900	.500	SPEB-1511CB	164T	T-6
TSK-1031	1.000	.350	.312	4 / 2 Eff.	3.250	1.250	1.050	.750			
TSK-1231	1.250	.450	.312	6 / 3 Eff.	3.250	1.250	1.100	.750			
TSK-1531	1.500	.500	.312	6 / 3 Eff.	3.250	1.250	1.125	.750			
TSK-2031	2.000	.750	.312	8 / 4 Eff.	4.000	2.000	N/A	.750			
TSK-3031	3.000	1.000	.312	8 / 4 Eff.	4.500	2.250	N/A	1.000			

Chipbreaker Insert

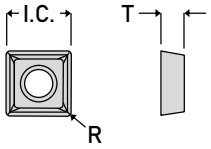

Insert Info.

Insert #	I.C.	T	R	Grades
SPEB-1511CB	.187	.082	.015	K11 K22

Speed and Feed Info.

Material	S.F.M.	I.P.T.
Mild & Low Carbon Steel *Ex. 1018, 1020, 1117, 1141, 12L14*	800 - 1200	.001 - .002
High Carbon & Alloy Steel *Ex. 1045, 4140, 4340, 52100, 8620*	500 - 800	.001 - .002
Lower Carbon Tool Steel *Ex. P-20, H-13, S-7*	400 - 700	.001 - .002
Tool Steel *Ex. A-2, A-6, D-2, M-2*	300 - 600	.001 - .002
Stainless Steel *Ex. 304, 316, 420, 15-5PH, 17-4PH*	300 - 600	.001 - .002
Iron *Ex. Cast, Ductile, Nodular*	600 - 1000	.001 - .002
Nickel & Titanium Alloy *Ex. Inconel, Hastelloy, TI-6AL-4V*	120 - 180	.001 - .002
Non-Ferrous Metal *Ex. Aluminum, Bronze, Brass*	1000 - 2500	.0015 - .003

TSK

T-Slot / Key Cutters

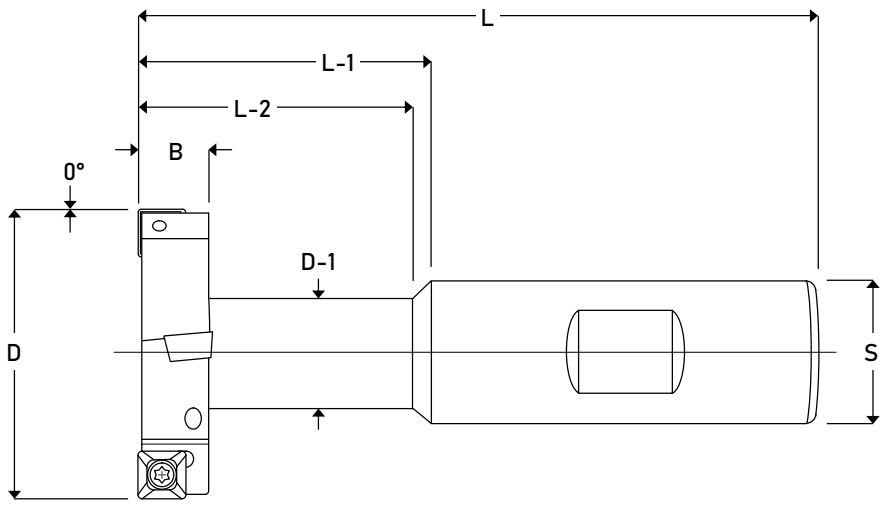

Tool Info.											
Tool #	D	D-1	B	Flutes	L	L-1	L-2	S	Insert	Screw	Wrench
TSK-7537	.750	.310	.375	2 / 1 Eff.	2.750	1.000	.900	.500	SPEB-221P	314T	T-8
TSK-1037	1.000	.350	.375	4 / 2 Eff.	3.250	1.250	1.030	.750			
TSK-1237	1.250	.510	.375	4 / 2 Eff.	3.500	1.500	1.375	.750			
TSK-1537	1.500	.575	.375	4 / 2 Eff.	3.500	1.500	1.410	.750			
TSK-2037	2.000	.750	.375	6 / 3 Eff.	4.000	2.000	N/A	.750			
TSK-3037	3.000	1.000	.375	6 / 3 Eff.	4.500	2.250	N/A	1.000			

Positive Top Insert

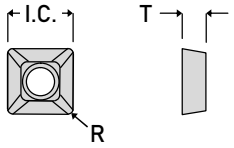

Insert Info.				
Insert #	I.C.	T	R	Grade
SPEB-221P	.250	.125	.015	K11

Speed and Feed Info.		
Material	S.F.M.	I.P.T.
Mild & Low Carbon Steel *Ex. 1018, 1020, 1117, 1141, 12L14*	800 - 1200	.002 - .006
High Carbon & Alloy Steel *Ex. 1045, 4140, 4340, 52100, 8620*	500 - 800	.002 - .005
Lower Carbon Tool Steel *Ex. P-20, H-13, S-7*	400 - 700	.002 - .005
Tool Steel *Ex. A-2, A-6, D-2, M-2*	300 - 600	.002 - .004
Stainless Steel *Ex. 304, 316, 420, 15-5PH, 17-4PH*	300 - 600	.002 - .004
Iron *Ex. Cast, Ductile, Nodular*	600 - 1000	.003 - .007
Nickel & Titanium Alloy *Ex. Inconel, Hastelloy, TI-6AL-4V*	120 - 180	.001 - .003
Non-Ferrous Metal *Ex. Aluminum, Bronze, Brass*	1000 - 2500	.003 - .008

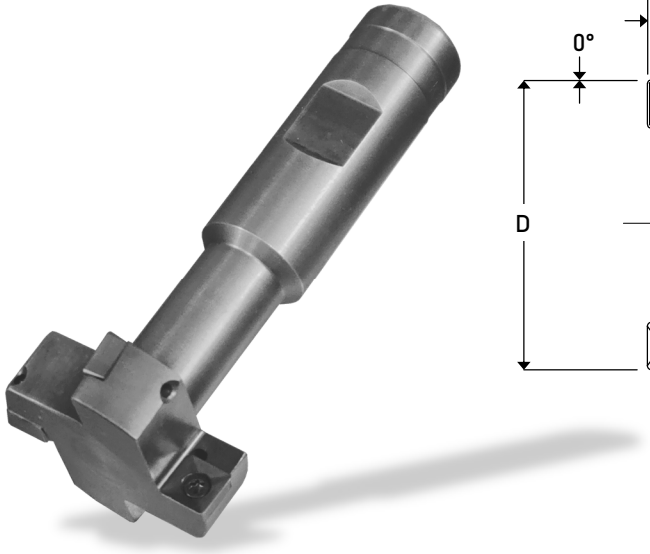

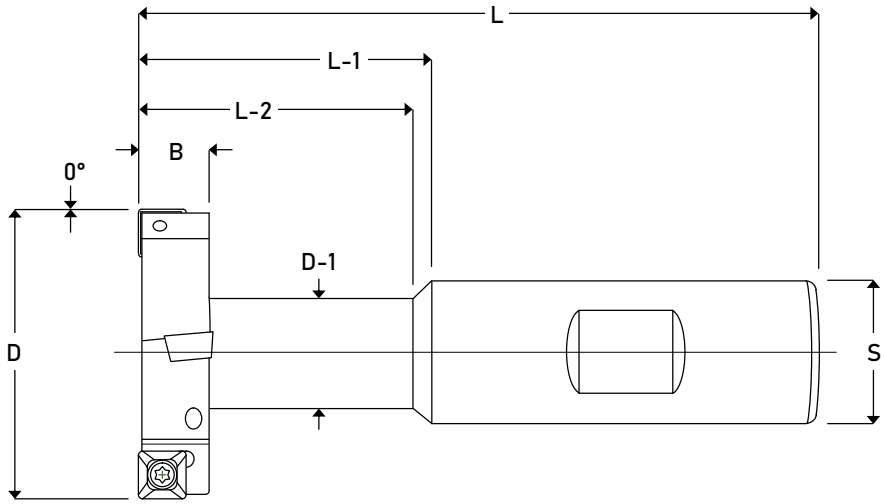

Tool Info.

Tool #	D	D-1	B	Flutes	L	L-1	L-2	S	Insert	Screw	Wrench
TSK-1550	1.500	.575	.500	4 / 2 Eff.	3.625	1.625	1.531	.750	SPEB-2522P	314T	T-8
TSK-2050	2.000	.750	.500	6 / 3 Eff.	4.125	2.125	N/A	.750			
TSK-2550	2.500	.875	.500	6 / 3 Eff.	4.625	2.375	2.300	1.000			
TSK-3050	3.000	1.000	.500	6 / 3 Eff.	4.625	2.375	N/A	1.000			

Positive Top Insert

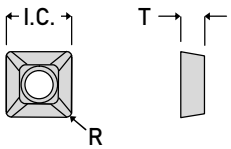

Insert Info.

Insert #	I.C.	T	R	Grades
SPEB-2522P	.312	.125	.031	B1M D66 K11 K22

Speed and Feed Info.

Material	S.F.M.	I.P.T.
Mild & Low Carbon Steel *Ex. 1018, 1020, 1117, 1141, 12L14*	800 - 1200	.002 - .006
High Carbon & Alloy Steel *Ex. 1045, 4140, 4340, 52100, 8620*	500 - 800	.002 - .005
Lower Carbon Tool Steel *Ex. P-20, H-13, S-7*	400 - 700	.002 - .005
Tool Steel *Ex. A-2, A-6, D-2, M-2*	300 - 600	.002 - .004
Stainless Steel *Ex. 304, 316, 420, 15-5PH, 17-4PH*	300 - 600	.002 - .004
Iron *Ex. Cast, Ductile, Nodular*	600 - 1000	.003 - .007
Nickel & Titanium Alloy *Ex. Inconel, Hastelloy, TI-6AL-4V*	120 - 180	.001 - .003
Non-Ferrous Metal *Ex. Aluminum, Bronze, Brass*	1000 - 2500	.003 - .008

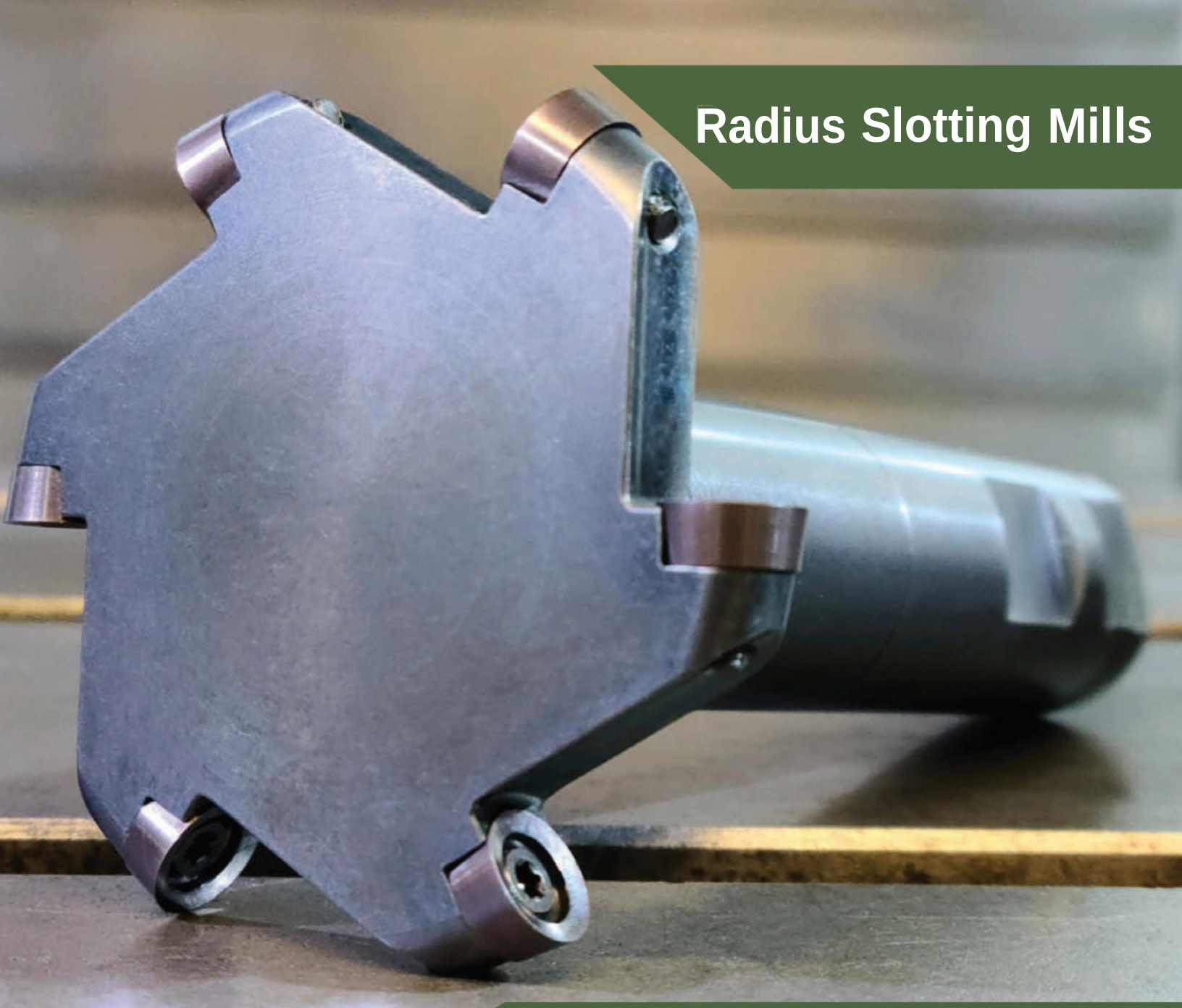

Radius Slotting Mills

Available in Multiple Widths
2 Insert Styles Available in Most Widths
Positive Top Inserts

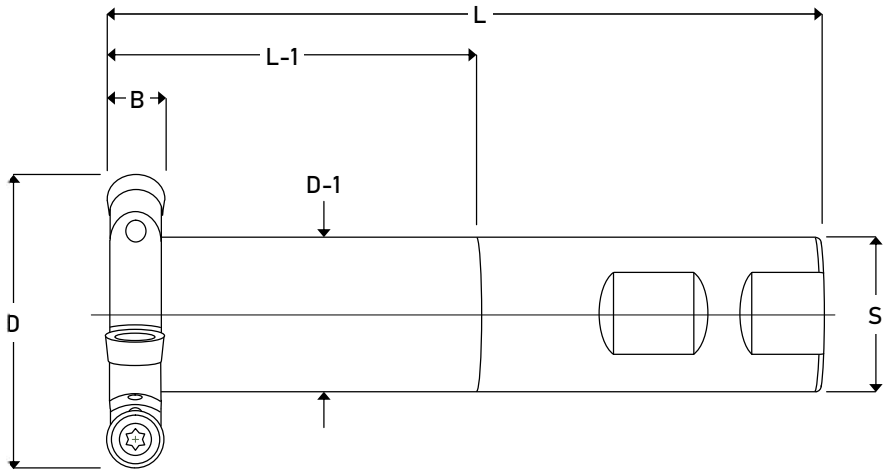

Tool Info.

Tool #	D	D-1	B	Flutes	L	L-1	S	Molded Insert	Ground Insert
TSR-7502	.750	.375	.250	3	3.500	1.500	.750	RCEB-22	RCEB-22G
TSR-1002	1.000	.500	.250	4	3.500	1.500	.750		
TSR-1252	1.250	.625	.250	4	4.125	1.875	1.000		
TSR-1502	1.500	.625	.250	5	4.125	1.875	1.000		
TSR-2002	2.000	1.000	.250	6	4.625	2.375	1.000		
TSR-2505	2.500	1.000	.250	6	4.625	2.375	1.000		
TSR-3002	3.000	1.000	.250	8	4.625	2.375	1.000		
TSR-4002	4.000	1.250	.250	8	5.000	2.750	1.250		

Positive Top Inserts

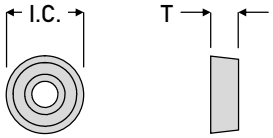

Insert Info.

Insert #	I.C.	T	Screw	Wrench	Grades
RCEB-22	.250	.125	314T	T-8	K11
RCEB-22G	.250	.125	314T	T-8	B1M K11 K22

Speed and Feed Info.

Material	S.F.M.	I.P.T.
Mild & Low Carbon Steel *Ex. 1018, 1020, 1117, 1141, 12L14*	800 - 1200	.002 - .003
High Carbon & Alloy Steel *Ex. 1045, 4140, 4340, 52100, 8620*	500 - 800	.002 - .003
Lower Carbon Tool Steel *Ex. P-20, H-13, S-7*	400 - 700	.002 - .003
Tool Steel *Ex. A-2, A-6, D-2, M-2*	300 - 600	.002 - .003
Stainless Steel *Ex. 304, 316, 420, 15-5PH, 17-4PH*	300 - 600	.002 - .003
Iron *Ex. Cast, Ductile, Nodular*	600 - 1000	.002 - .003
Nickel & Titanium Alloy *Ex. Inconel, Hastelloy, TI-6AL-4V*	120 - 180	.001 - .002
Non-Ferrous Metal *Ex. Aluminum, Bronze, Brass*	1000 - 2500	.002 - .004

TSR

Radius Slotting Mills

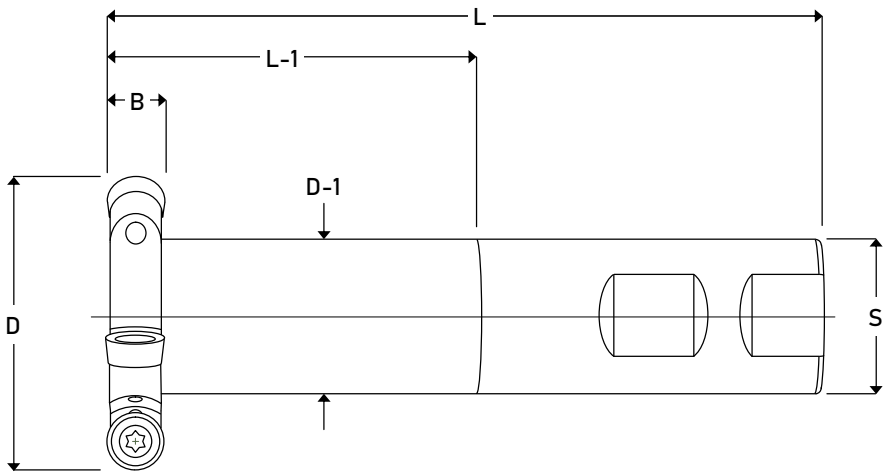

Tool Info.

Tool #	D	D-1	B	Flutes	L	L-1	S	Ground Insert
TSR-7525	.750	.375	.312	2	3.500	1.500	.750	RCEB-25G
TSR-1025	1.000	.500	.312	3	3.500	1.500	.750	
TSR-1225	1.250	.625	.312	4	4.125	1.875	1.000	
TSR-1525	1.500	.625	.312	5	4.125	1.875	1.000	
TSR-2025	2.000	1.000	.312	6	4.625	2.375	1.000	
TSR-2525	2.500	1.000	.312	6	4.625	2.375	1.000	
TSR-3025	3.000	1.000	.312	7	4.625	2.375	1.000	
TSR-4025	4.000	1.250	.312	8	5.000	2.750	1.250	

Positive Top Inserts

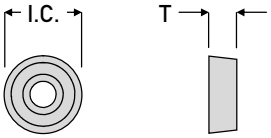

Insert Info.

Insert #	I.C.	T	Screw	Wrench	Grades
RCEB-25G	.312	.125	314T	T-8	B1M K11 K22

Speed and Feed Info.

Material	S.F.M.	I.P.T.
Mild & Low Carbon Steel *Ex. 1018, 1020, 1117, 1141, 12L14*	800 - 1200	.002 - .003
High Carbon & Alloy Steel *Ex. 1045, 4140, 4340, 52100, 8620*	500 - 800	.002 - .003
Lower Carbon Tool Steel *Ex. P-20, H-13, S-7*	400 - 700	.002 - .003
Tool Steel *Ex. A-2, A-6, D-2, M-2*	300 - 600	.002 - .003
Stainless Steel *Ex. 304, 316, 420, 15-5PH, 17-4PH*	300 - 600	.002 - .003
Iron *Ex. Cast, Ductile, Nodular*	600 - 1000	.002 - .003
Nickel & Titanium Alloy *Ex. Inconel, Hastelloy, TI-6AL-4V*	120 - 180	.001 - .002
Non-Ferrous Metal *Ex. Aluminum, Bronze, Brass*	1000 - 2500	.002 - .004

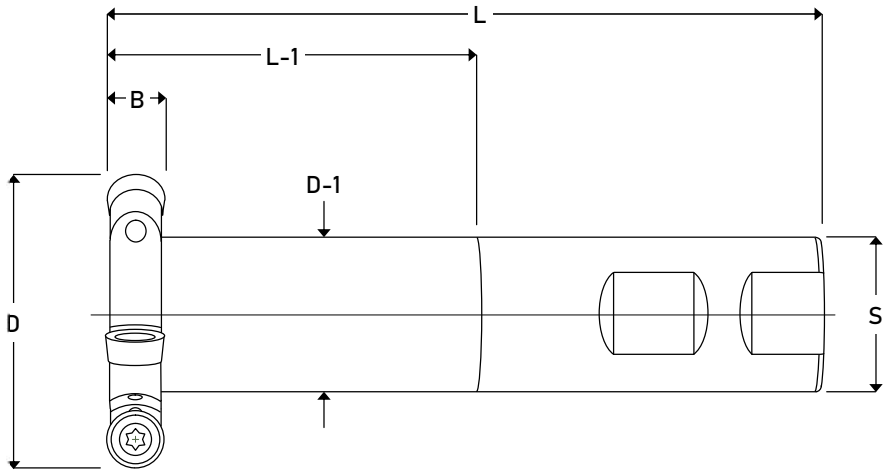

Tool Info.

Tool #	D	D-1	B	Flutes	L	L-1	S	Molded Insert	Ground Insert
TSR-1003	1.000	.500	.375	3	3.500	1.500	1.000		
TSR-1253	1.250	.625	.375	3	4.125	1.875	1.000		
TSR-1503	1.500	.625	.375	4	4.125	1.875	1.000		
TSR-2003	2.000	1.000	.375	5	4.625	2.375	1.000	RCEB-325	RCEB-325G
TSR-2503	2.500	1.000	.375	6	4.625	2.375	1.000		
TSR-3003	3.000	1.000	.375	6	4.625	2.375	1.000		
TSR-4003	4.000	1.250	.375	8	5.000	2.750	1.250		

Positive Top Inserts

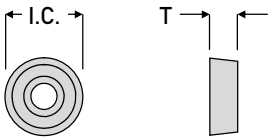

Insert Info.

Insert #	I.C.	T	Screw	Wrench	Grades
RCEB-325	.375	.156	538T	T-10	K11
RCEB-325G	.375	.156	538T	T-10	B1M K11 K22

Speed and Feed Info.

Material	S.F.M.	I.P.T.
Mild & Low Carbon Steel *Ex. 1018, 1020, 1117, 1141, 12L14*	800 - 1200	.002 - .003
High Carbon & Alloy Steel *Ex. 1045, 4140, 4340, 52100, 8620*	500 - 800	.002 - .003
Lower Carbon Tool Steel *Ex. P-20, H-13, S-7*	400 - 700	.002 - .003
Tool Steel *Ex. A-2, A-6, D-2, M-2*	300 - 600	.002 - .003
Stainless Steel *Ex. 304, 316, 420, 15-5PH, 17-4PH*	300 - 600	.002 - .003
Iron *Ex. Cast, Ductile, Nodular*	600 - 1000	.002 - .003
Nickel & Titanium Alloy *Ex. Inconel, Hastelloy, TI-6AL-4V*	120 - 180	.001 - .002
Non-Ferrous Metal *Ex. Aluminum, Bronze, Brass*	1000 - 2500	.002 - .004

K-Tool, Inc.

TSR

Radius Slotting Mills

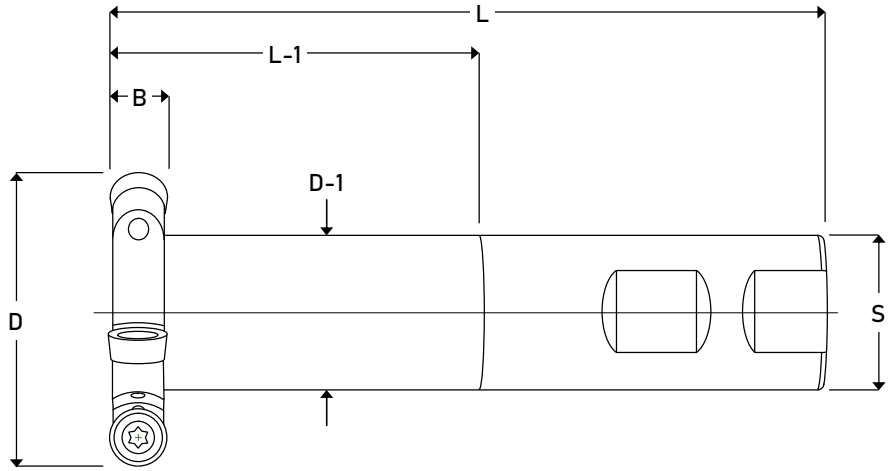

Tool Info.									
Tool #	D	D-1	B	Flutes	L	L-1	S	Molded Insert	Ground Insert
TSR-1504	1.500	.625	.500	3	4.125	1.875	1.000		
TSR-2004	2.000	1.000	.500	4	4.625	2.375	1.000		
TSR-2504	2.500	1.000	.500	4	4.625	2.375	1.000	RCEB-435	RCEB-435G
TSR-3004	3.000	1.000	.500	5	4.625	2.375	1.000		
TSR-4004	4.000	1.250	.500	6	5.000	2.750	1.250		

Positive Top Inserts

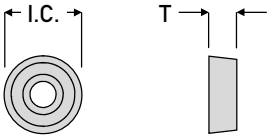

Insert Info.					
Insert #	I.C.	T	Screw	Wrench	Grades
RCEB-435	.500	.220	838T	T-20	K11
RCEB-435G	.500	.220	838T	T-20	B1M K11 K22

Speed and Feed Info.		
Material	S.F.M.	I.P.T.
Mild & Low Carbon Steel *Ex. 1018, 1020, 1117, 1141, 12L14*	800 - 1200	.002 - .003
High Carbon & Alloy Steel *Ex. 1045, 4140, 4340, 52100, 8620*	500 - 800	.002 - .003
Lower Carbon Tool Steel *Ex. P-20, H-13, S-7*	400 - 700	.002 - .003
Tool Steel *Ex. A-2, A-6, D-2, M-2*	300 - 600	.002 - .003
Stainless Steel *Ex. 304, 316, 420, 15-5PH, 17-4PH*	300 - 600	.002 - .003
Iron *Ex. Cast, Ductile, Nodular*	600 - 1000	.002 - .003
Nickel & Titanium Alloy *Ex. Inconel, Hastelloy, TI-6AL-4V*	120 - 180	.001 - .002
Non-Ferrous Metal *Ex. Aluminum, Bronze, Brass*	1000 - 2500	.002 - .004

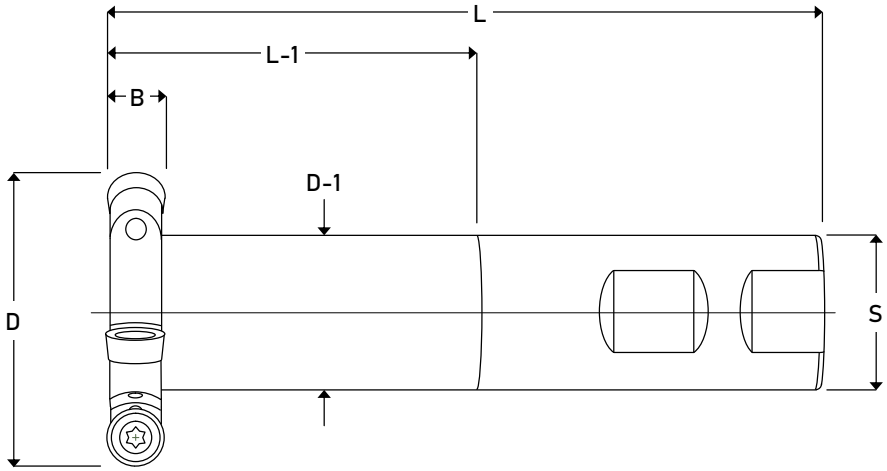

Tool Info.

Tool #	D	D-1	B	Flutes	L	L-1	S	Ground Insert
TSR-1545	1.500	.625	.625	2	4.125	1.875	1.000	
TSR-2045	2.000	1.000	.625	3	4.625	2.375	1.000	
TSR-2545	2.500	1.000	.625	4	4.625	2.375	1.000	RCEB-53G
TSR-3045	3.000	1.000	.625	5	4.625	2.375	1.000	
TSR-4045	4.000	1.250	.625	6	5.000	2.750	1.250	

Positive Top Inserts

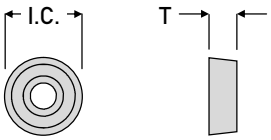

Insert Info.

Insert #	I.C.	T	Screw	Wrench	Grades
RCEB-53G	.625	.220	838T	T-20	B1M K11 K22

Speed and Feed Info.

Material	S.F.M.	I.P.T.
Mild & Low Carbon Steel *Ex. 1018, 1020, 1117, 1141, 12L14*	800 - 1200	.002 - .003
High Carbon & Alloy Steel *Ex. 1045, 4140, 4340, 52100, 8620*	500 - 800	.002 - .003
Lower Carbon Tool Steel *Ex. P-20, H-13, S-7*	400 - 700	.002 - .003
Tool Steel *Ex. A-2, A-6, D-2, M-2*	300 - 600	.002 - .003
Stainless Steel *Ex. 304, 316, 420, 15-5PH, 17-4PH*	300 - 600	.002 - .003
Iron *Ex. Cast, Ductile, Nodular*	600 - 1000	.002 - .003
Nickel & Titanium Alloy *Ex. Inconel, Hastelloy, TI-6AL-4V*	120 - 180	.001 - .002
Non-Ferrous Metal *Ex. Aluminum, Bronze, Brass*	1000 - 2500	.002 - .004

Slotting / Half Side Mills

Adjustable Width of Cut
Arbor Mount or Shell Mount
Can Be Set Left Hand, Right Hand or Staggered

Arbor Mount

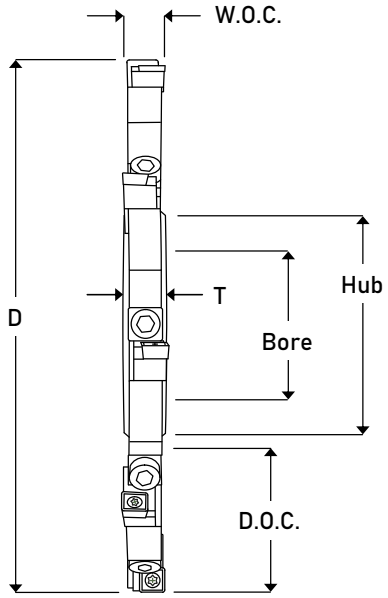

L.H. Cartridge

R.H. Cartridge

Series #00

Cutters can be used as: Half Side Mill (RH or LH)
Full Slot Mill (W.O.C. Required)

Tool Info.

Tool #	D	Flutes	W.O.C.	D.O.C.	Bore	Key	Hub	T
SC-4000	4.000	10	.250 - .340	1.090	1.250	.312	1.630	.340
SC-5000	5.000	12	.250 - .340	1.590	1.250	.312	1.630	.340
SC-6000	6.000	14	.250 - .340	1.900	1.500	.375	2.000	.340

Notes:
-Tool must be run as 1/2 the number of flutes effective when set for a full slot.
-Initial W.O.C. to be set with dial indicator
(K-Tool Inc. will set width at no charge before shipping).

Tool #	Cartridge	Wedge	Wedge Screw	Insert
SC-4000				
SC-5000	1511C-RH/LH	1	6	SPEB-1511CB
SC-6000				

Chipbreaker Insert

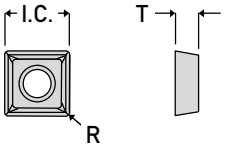

Insert Info.

Insert #	I.C.	T	R	Screw	Wrench	Grades
SPEB-1511CB	.187	.082	.015	164T	T-6	K11 K22

Speed and Feed Info.

Material	S.F.M.	I.P.T.
Mild & Low Carbon Steel *Ex. 1018, 1020, 1117, 1141, 12L14*	800 - 1200	.002 - .003
High Carbon & Alloy Steel *Ex. 1045, 4140, 4340, 52100, 8620*	500 - 800	.002 - .003
Lower Carbon Tool Steel *Ex. P-20, H-13, S-7*	400 - 700	.002 - .003
Tool Steel *Ex. A-2, A-6, D-2, M-2*	300 - 600	.002 - .003
Stainless Steel *Ex. 304, 316, 420, 15-5PH, 17-4PH*	300 - 600	.002 - .003
Iron *Ex. Cast, Ductile, Nodular*	600 - 1000	.002 - .003
Nickel & Titanium Alloy *Ex. Inconel, Hastelloy, TI-6AL-4V*	120 - 180	.001 - .002
Non-Ferrous Metal *Ex. Aluminum, Bronze, Brass*	1000 - 2500	.002 - .004

Shell Mount

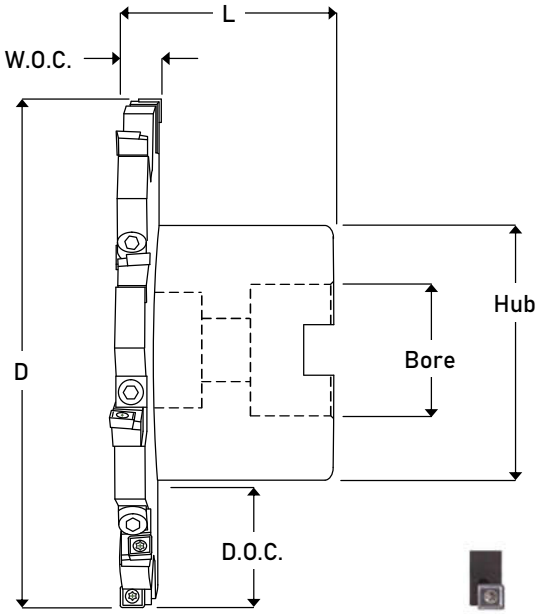

L.H. Cartridge

R.H. Cartridge

Series #00

Cutters can be used as: Half Side Mill (RH or LH)
Full Slot Mill (W.O.C. Required)

Tool Info.

Tool #	D	Flutes	W.O.C.	D.O.C.	Bore	Key	Hub	L
SCSM-4000	4.000	10	.250 - .340	.875	1.000	.375	2.000	1.625
SCSM-5000	5.000	12	.250 - .340	1.062	1.250	.500	2.625	1.750
SCSM-6000	6.000	14	.250 - .340	1.562	1.250	.500	2.625	1.750

Notes:
-Tool must be run as 1/2 the number of flutes effective when set for a full slot.
-Initial W.O.C. to be set with dial indicator
(K-Tool Inc. will set width at no charge before shipping).

Tool #	Cartridge	Wedge	Wedge Screw	Insert
SCSM-4000				
SCSM-5000	1511C-RH/LH	1	6	SPEB-1511CB
SCSM-6000				

Chipbreaker Insert

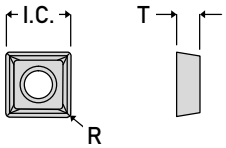

Insert Info.

Insert #	I.C.	T	R	Screw	Wrench	Grades
SPEB-1511CB	.187	.082	.015	164T	T-6	K11 K22

Speed and Feed Info.

Material	S.F.M.	I.P.T.
Mild & Low Carbon Steel *Ex. 1018, 1020, 1117, 1141, 12L14*	800 - 1200	.002 - .003
High Carbon & Alloy Steel *Ex. 1045, 4140, 4340, 52100, 8620*	500 - 800	.002 - .003
Lower Carbon Tool Steel *Ex. P-20, H-13, S-7*	400 - 700	.002 - .003
Tool Steel *Ex. A-2, A-6, D-2, M-2*	300 - 600	.002 - .003
Stainless Steel *Ex. 304, 316, 420, 15-5PH, 17-4PH*	300 - 600	.002 - .003
Iron *Ex. Cast, Ductile, Nodular*	600 - 1000	.002 - .003
Nickel & Titanium Alloy *Ex. Inconel, Hastelloy, TI-6AL-4V*	120 - 180	.001 - .002
Non-Ferrous Metal *Ex. Aluminum, Bronze, Brass*	1000 - 2500	.002 - .004

Arbor Mount

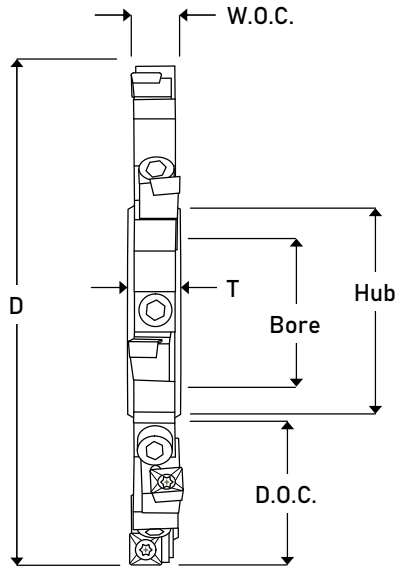

L.H. Cartridge

R.H. Cartridge

SC

Slotting / Half Side Mills

Series #0

Cutters can be used as: Half Side Mill (RH or LH)
Full Slot Mill (W.O.C. Required)

Tool Info.

Tool #	D	Flutes	W.O.C.	D.O.C.	Bore	Key	Hub	T
SC-400	4.000	10	.340 - .430	1.090	1.250	.312	1.630	.422
SC-500	5.000	12	.340 - .430	1.590	1.250	.312	1.630	.422
SC-600	6.000	14	.340 - .430	1.900	1.500	.375	2.000	.422

Notes:
-Tool must be run as 1/2 the number of flutes effective when set for a full slot.
-Initial W.O.C. to be set with dial indicator
(K-Tool Inc. will set width at no charge before shipping).

Tool #	Cartridge	Wedge	Wedge Screw	Insert
SC-400				
SC-500	222C-RH/LH	2	8	SPEB-222P
SC-600				

Positive Top Insert

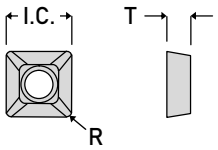

Insert Info.

Insert #	I.C.	T	R	Screw	Wrench	Grades
SPEB-222P	.250	.125	.031	314T	T-8	B1M D66 K11 K22

Speed and Feed Info.

Material	S.F.M.	I.P.T.
Mild & Low Carbon Steel *Ex. 1018, 1020, 1117, 1141, 12L14*	800 - 1200	.002 - .006
High Carbon & Alloy Steel *Ex. 1045, 4140, 4340, 52100, 8620*	500 - 800	.002 - .005
Lower Carbon Tool Steel *Ex. P-20, H-13, S-7*	400 - 700	.002 - .005
Tool Steel *Ex. A-2, A-6, D-2, M-2*	300 - 600	.002 - .004
Stainless Steel *Ex. 304, 316, 420, 15-5PH, 17-4PH*	300 - 600	.002 - .004
Iron *Ex. Cast, Ductile, Nodular*	600 - 1000	.003 - .007
Nickel & Titanium Alloy *Ex. Inconel, Hastelloy, TI-6AL-4V*	120 - 180	.001 - .003
Non-Ferrous Metal *Ex. Aluminum, Bronze, Brass*	1000 - 2500	.003 - .008

Shell Mount

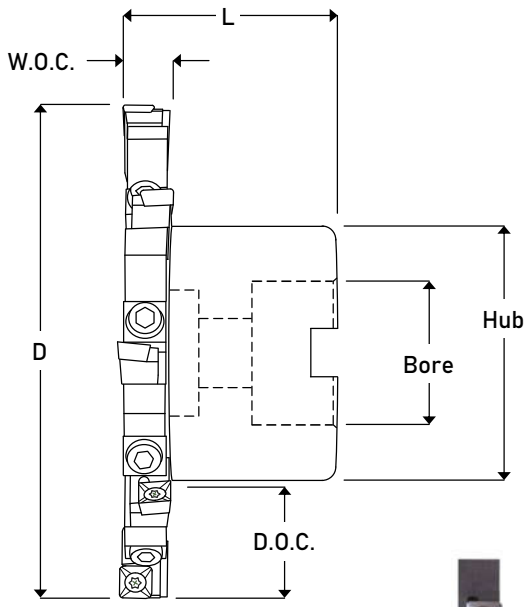

L.H. Cartridge

R.H. Cartridge

Series #0

Cutters can be used as: Half Side Mill (RH or LH)
Full Slot Mill (W.O.C. Required)

Tool Info.

Tool #	D	Flutes	W.O.C.	D.O.C.	Bore	Key	Hub	L
SCSM-400	4.000	10	.340 - .430	.875	1.000	.375	2.000	1.625
SCSM-500	5.000	12	.340 - .430	1.062	1.250	.500	2.625	1.750
SCSM-600	6.000	14	.340 - .430	1.562	1.250	.500	2.625	1.750

Notes:
-Tool must be run as 1/2 the number of flutes effective when set for a full slot.
-Initial W.O.C. to be set with dial indicator
(K-Tool Inc. will set width at no charge before shipping).

Tool #	Cartridge	Wedge	Wedge Screw	Insert
SCSM-400				
SCSM-500	222C-RH/LH	2	8	SPEB-222P
SCSM-600				

Positive Top Insert

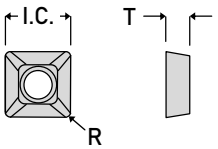

Insert Info.

Insert #	I.C.	T	R	Screw	Wrench	Grades
SPEB-222P	.250	.125	.031	314T	T-8	B1M D66 K11 K22

Speed and Feed Info.

Material	S.F.M.	I.P.T.
Mild & Low Carbon Steel *Ex. 1018, 1020, 1117, 1141, 12L14*	800 - 1200	.002 - .006
High Carbon & Alloy Steel *Ex. 1045, 4140, 4340, 52100, 8620*	500 - 800	.002 - .005
Lower Carbon Tool Steel *Ex. P-20, H-13, S-7*	400 - 700	.002 - .005
Tool Steel *Ex. A-2, A-6, D-2, M-2*	300 - 600	.002 - .004
Stainless Steel *Ex. 304, 316, 420, 15-5PH, 17-4PH*	300 - 600	.002 - .004
Iron *Ex. Cast, Ductile, Nodular*	600 - 1000	.003 - .007
Nickel & Titanium Alloy *Ex. Inconel, Hastelloy, TI-6AL-4V*	120 - 180	.001 - .003
Non-Ferrous Metal *Ex. Aluminum, Bronze, Brass*	1000 - 2500	.003 - .008

Arbor Mount

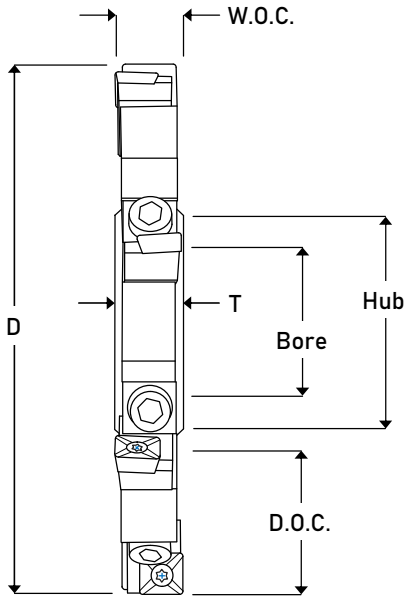

L.H. Cartridge

R.H. Cartridge

SC

Slotting / Half Side Mills

Series #1

Cutters can be used as: Half Side Mill (RH or LH)
Full Slot Mill (W.O.C. Required)

Tool Info.

Tool #	D	Flutes	W.O.C.	D.O.C.	Bore	Key	Hub	T
SC-401	4.000	8	.430 - .530	1.090	1.250	.312	1.630	.500
SC-501	5.000	10	.430 - .530	1.590	1.250	.312	1.630	.500
SC-601	6.000	12	.430 - .530	1.900	1.500	.375	2.000	.500
SC-801	8.000	16	.430 - .530	2.900	1.500	.375	2.000	.500

Notes:
-Tool must be run as 1/2 the number of flutes effective when set for a full slot.
-Initial W.O.C. to be set with dial indicator
(K-Tool Inc. will set width at no charge before shipping).

Tool #	Cartridge	Wedge	Wedge Screw	Insert
SC-401 SC-501 SC-601 SC-801	2522C-RH/LH	3	10	SPEB-2522P

45° Cartridge

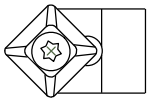

Cart. #	2522C-45
Insert	SPEB-2522P

Positive Top Insert

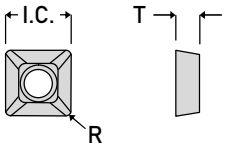

Insert Info.

Insert #	I.C.	T	R	Screw	Wrench	Grades
SPEB-2522P	.312	.125	.031	314T	T-8	B1M D66 K11 K22

Speed and Feed Info.

Material	S.F.M.	I.P.T.
Mild & Low Carbon Steel *Ex. 1018, 1020, 1117, 1141, 12L14*	800 - 1200	.002 - .006
High Carbon & Alloy Steel *Ex. 1045, 4140, 4340, 52100, 8620*	500 - 800	.002 - .005
Lower Carbon Tool Steel *Ex. P-20, H-13, S-7*	400 - 700	.002 - .005
Tool Steel *Ex. A-2, A-6, D-2, M-2*	300 - 600	.002 - .004
Stainless Steel *Ex. 304, 316, 420, 15-5PH, 17-4PH*	300 - 600	.002 - .004
Iron *Ex. Cast, Ductile, Nodular*	600 - 1000	.003 - .007
Nickel & Titanium Alloy *Ex. Inconel, Hastelloy, TI-6AL-4V*	120 - 180	.001 - .003
Non-Ferrous Metal *Ex. Aluminum, Bronze, Brass*	1000 - 2500	.003 - .008

Shell Mount

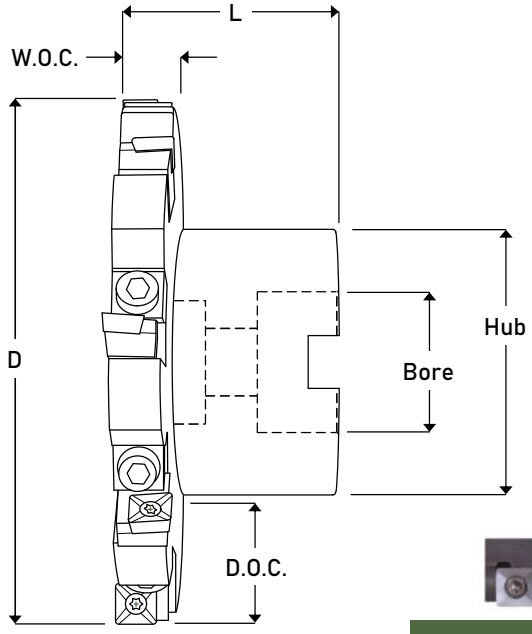

L.H. Cartridge

R.H. Cartridge

Series #1

Cutters can be used as: Half Side Mill (RH or LH)
Full Slot Mill (W.O.C. Required)

Tool Info.

Tool #	D	Flutes	W.O.C.	D.O.C.	Bore	Key	Hub	L
SCSM-401	4.000	8	.430 - .530	.875	1.000	.375	2.000	1.625
SCSM-501	5.000	10	.430 - .530	1.062	1.250	.500	2.625	1.750
SCSM-601	6.000	12	.430 - .530	1.000	1.500	.625	3.800	2.250
SCSM-801	8.000	16	.430 - .530	1.975	1.500	.625	3.800	2.250

Notes:
-Tool must be run as 1/2 the number of flutes effective when set for a full slot.
-Initial W.O.C. to be set with dial indicator
(K-Tool Inc. will set width at no charge before shipping).

Tool #	Cartridge	Wedge	Wedge Screw	Insert
SCSM-401	2522C-RH/LH	3	10	SPEB-2522P
SCSM-501				
SCSM-601				
SCSM-801				

45° Cartridge

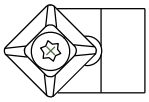

Cart. #	2522C-45
Insert	SPEB-2522P

Positive Top Insert

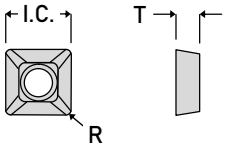

Insert Info.

Insert #	I.C.	T	R	Screw	Wrench	Grades
SPEB-2522P	.312	.125	.031	314T	T-8	B1M D66 K11 K22

Speed and Feed Info.

Material	S.F.M.	I.P.T.
Mild & Low Carbon Steel *Ex. 1018, 1020, 1117, 1141, 12L14*	800 - 1200	.002 - .006
High Carbon & Alloy Steel *Ex. 1045, 4140, 4340, 52100, 8620*	500 - 800	.002 - .005
Lower Carbon Tool Steel *Ex. P-20, H-13, S-7*	400 - 700	.002 - .005
Tool Steel *Ex. A-2, A-6, D-2, M-2*	300 - 600	.002 - .004
Stainless Steel *Ex. 304, 316, 420, 15-5PH, 17-4PH*	300 - 600	.002 - .004
Iron *Ex. Cast, Ductile, Nodular*	600 - 1000	.003 - .007
Nickel & Titanium Alloy *Ex. Inconel, Hastelloy, TI-6AL-4V*	120 - 180	.001 - .003
Non-Ferrous Metal *Ex. Aluminum, Bronze, Brass*	1000 - 2500	.003 - .008

Arbor Mount

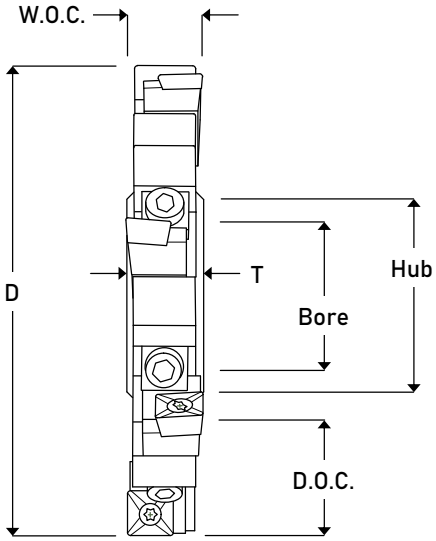

L.H. Cartridge

R.H. Cartridge

Series #2

Cutters can be used as: Half Side Mill (RH or LH)
Full Slot Mill (W.O.C. Required)

Tool Info.

Tool #	D	Flutes	W.O.C.	D.O.C.	Bore	Key	Hub	T
SC-402	4.000	8	.530 - .687	1.090	1.250	.312	1.630	.625
SC-502	5.000	10	.530 - .687	1.590	1.250	.312	1.630	.625
SC-602	6.000	12	.530 - .687	1.900	1.500	.375	2.000	.625
SC-802	8.000	16	.530 - .687	2.900	1.500	.375	2.000	.625
SC-1002	10.000	16	.530 - .687	3.900	1.500	.375	2.000	.625

Notes:
-Tool must be run as 1/2 the number of flutes effective when set for a full slot.
-Initial W.O.C. to be set with dial indicator
(K-Tool Inc. will set width at no charge before shipping).

Tool #	Cartridge	Wedge	Wedge Screw	Insert
SC-402				
SC-502				
SC-602	332C-RH/LH	3	10	SPEB-332P
SC-802				
SC-1002				

Positive Top Insert

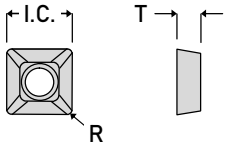

Insert Info.

Insert #	I.C.	T	R	Screw	Wrench	Grades
SPEB-332P	.375	.187	.031	538T	T-10	B1M D66 K11 K22

Speed and Feed Info.

Material	S.F.M.	I.P.T.
Mild & Low Carbon Steel *Ex. 1018, 1020, 1117, 1141, 12L14*	800 - 1200	.002 - .006
High Carbon & Alloy Steel *Ex. 1045, 4140, 4340, 52100, 8620*	500 - 800	.002 - .005
Lower Carbon Tool Steel *Ex. P-20, H-13, S-7*	400 - 700	.002 - .005
Tool Steel *Ex. A-2, A-6, D-2, M-2*	300 - 600	.002 - .004
Stainless Steel *Ex. 304, 316, 420, 15-5PH, 17-4PH*	300 - 600	.002 - .004
Iron *Ex. Cast, Ductile, Nodular*	600 - 1000	.003 - .007
Nickel & Titanium Alloy *Ex. Inconel, Hastelloy, TI-6AL-4V*	120 - 180	.001 - .003
Non-Ferrous Metal *Ex. Aluminum, Bronze, Brass*	1000 - 2500	.003 - .008

Shell Mount

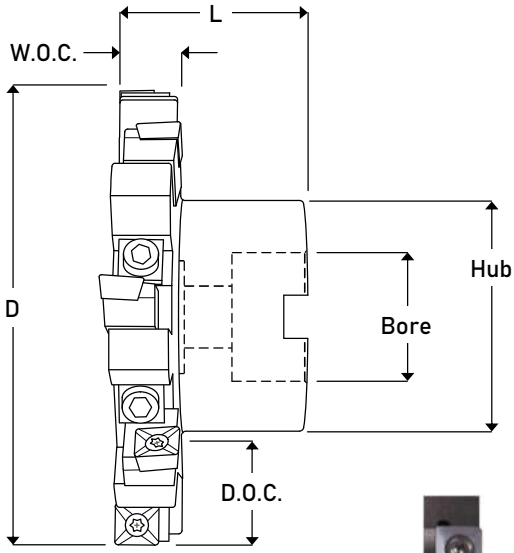

L.H. Cartridge

R.H. Cartridge

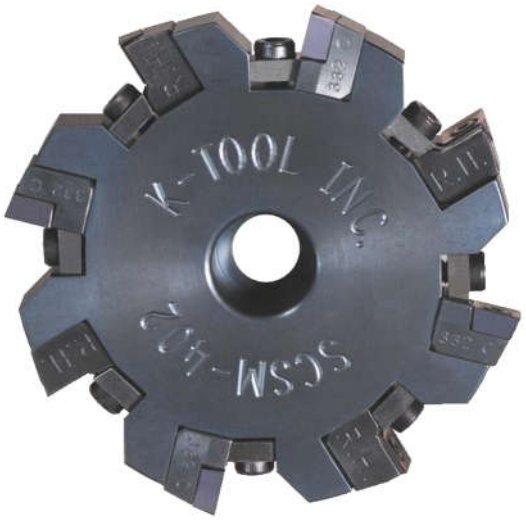

Series #2

Cutters can be used as: Half Side Mill (RH or LH)
Full Slot Mill (W.O.C. Required)

Tool Info.

Tool #	D	Flutes	W.O.C.	D.O.C.	Bore	Key	Hub	L
SCSM-402	4.000	8	.530 - .687	.875	1.000	.375	2.000	1.625
SCSM-502	5.000	10	.530 - .687	1.062	1.250	.500	2.625	1.750
SCSM-602	6.000	12	.530 - .687	1.000	1.500	.625	3.800	2.250
SCSM-802	8.000	16	.530 - .687	1.975	1.500	.625	3.800	2.250

Tool #	Cartridge	Wedge	Wedge Screw	Insert
SCSM-402	332C-RH/LH	3	10	SPEB-332P
SCSM-502				
SCSM-602				
SCSM-802				

Notes:
-Tool must be run as 1/2 the number of flutes effective when set for a full slot.
-Initial W.O.C. to be set with dial indicator
(K-Tool Inc. will set width at no charge before shipping).

Speed and Feed Info.

Material	S.F.M.	I.P.T.
Mild & Low Carbon Steel *Ex. 1018, 1020, 1117, 1141, 12L14*	800 - 1200	.002 - .006
High Carbon & Alloy Steel *Ex. 1045, 4140, 4340, 52100, 8620*	500 - 800	.002 - .005
Lower Carbon Tool Steel *Ex. P-20, H-13, S-7*	400 - 700	.002 - .005
Tool Steel *Ex. A-2, A-6, D-2, M-2*	300 - 600	.002 - .004
Stainless Steel *Ex. 304, 316, 420, 15-5PH, 17-4PH*	300 - 600	.002 - .004
Iron *Ex. Cast, Ductile, Nodular*	600 - 1000	.003 - .007
Nickel & Titanium Alloy *Ex. Inconel, Hastelloy, TI-6AL-4V*	120 - 180	.001 - .003
Non-Ferrous Metal *Ex. Aluminum, Bronze, Brass*	1000 - 2500	.003 - .008

Positive Top Insert

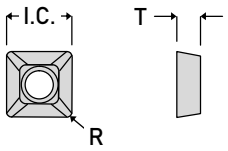

Insert Info.

Insert #	I.C.	T	R	Screw	Wrench	Grades
SPEB-332P	.375	.187	.031	538T	T-10	B1M D66 K11 K22

Arbor Mount

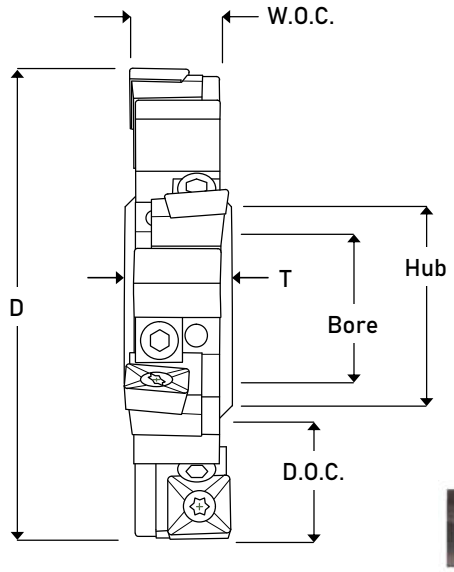

L.H. Cartridge

R.H. Cartridge

Series #3

Cutters can be used as: Half Side Mill (RH or LH)
Full Slot Mill (W.O.C. Required)

Tool Info.

Tool #	D	Flutes	W.O.C.	D.O.C.	Bore	Key	Hub	T
SC-403	4.000	8	.687 - .937	1.060	1.250	.312	1.630	.875
SC-503	5.000	10	.687 - .937	1.560	1.250	.312	1.630	.875
SC-603	6.000	12	.687 - .937	1.870	1.500	.375	2.000	.875
SC-803	8.000	16	.687 - .937	2.870	1.500	.375	2.000	.875
SC-1003	10.000	16	.687 - .937	3.870	1.500	.375	2.000	.875

Notes:
-Tool must be run as 1/2 the number of flutes effective when set for a full slot.
-Initial W.O.C. to be set with dial indicator
(K-Tool Inc. will set width at no charge before shipping).

Tool #	Cartridge	Wedge	Wedge Screw	Insert
SC-403				
SC-503				
SC-603	432C-RH/LH	3	10	SPEB-432PA
SC-803				
SC-1003				

45° Cartridge

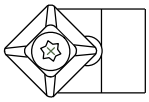

Cart. #	432C-45
Insert	SPEB-432PA

Positive Top Insert

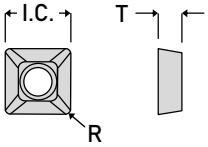

Insert Info.

Insert #	I.C.	T	R	Screw	Wrench	Grades
SPEB-432PA	.500	.187	.031	638T	T-15	B1M D66 K11 K22

Speed and Feed Info.

Material	S.F.M.	I.P.T.
Mild & Low Carbon Steel *Ex. 1018, 1020, 1117, 1141, 12L14*	800 - 1200	.002 - .006
High Carbon & Alloy Steel *Ex. 1045, 4140, 4340, 52100, 8620*	500 - 800	.002 - .005
Lower Carbon Tool Steel *Ex. P-20, H-13, S-7*	400 - 700	.002 - .005
Tool Steel *Ex. A-2, A-6, D-2, M-2*	300 - 600	.002 - .004
Stainless Steel *Ex. 304, 316, 420, 15-5PH, 17-4PH*	300 - 600	.002 - .004
Iron *Ex. Cast, Ductile, Nodular*	600 - 1000	.003 - .007
Nickel & Titanium Alloy *Ex. Inconel, Hastelloy, TI-6AL-4V*	120 - 180	.001 - .003
Non-Ferrous Metal *Ex. Aluminum, Bronze, Brass*	1000 - 2500	.003 - .008

Shell Mount

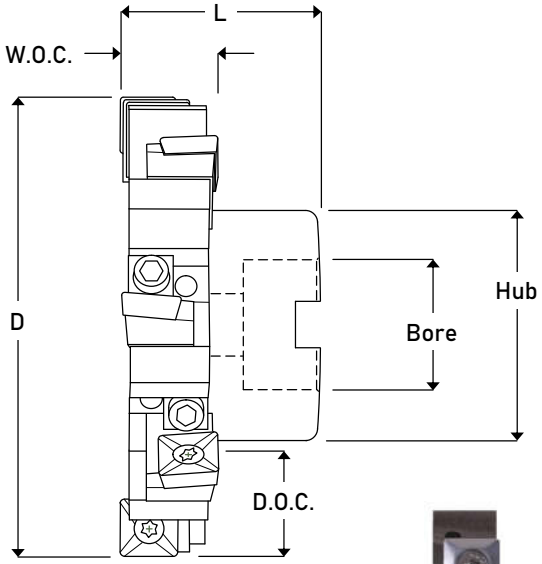

L.H. Cartridge

R.H. Cartridge

Series #3

Cutters can be used as: Half Side Mill (RH or LH)
Full Slot Mill (W.O.C. Required)

Tool Info.

Tool #	D	Flutes	W.O.C.	D.O.C.	Bore	Key	Hub	L
SCSM-403	4.000	8	.687 - .937	.875	1.000	.375	2.000	1.625
SCSM-503	5.000	10	.687 - .937	1.062	1.250	.500	2.625	1.750
SCSM-603	6.000	12	.687 - .937	1.000	1.500	.625	3.800	2.250
SCSM-803	8.000	16	.687 - .937	1.975	1.500	.625	3.800	2.250

Notes:
-Tool must be run as 1/2 the number of flutes effective when set for a full slot.
-Initial W.O.C. to be set with dial indicator
(K-Tool Inc. will set width at no charge before shipping).

Tool #	Cartridge	Wedge	Wedge Screw	Insert
SCSM-403	432C-RH/LH	3	10	SPEB-432PA
SCSM-503				
SCSM-603				
SCSM-803				

45° Cartridge

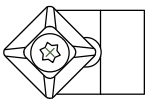

Cart. #	432C-45
Insert	SPEB-432PA

Positive Top Insert

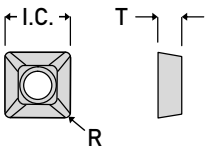

Insert Info.

Insert #	I.C.	T	R	Screw	Wrench	Grades
SPEB-432PA	.500	.187	.031	638T	T-15	B1M D66 K11 K22

Speed and Feed Info.

Material	S.F.M.	I.P.T.
Mild & Low Carbon Steel *Ex. 1018, 1020, 1117, 1141, 12L14*	800 - 1200	.002 - .006
High Carbon & Alloy Steel *Ex. 1045, 4140, 4340, 52100, 8620*	500 - 800	.002 - .005
Lower Carbon Tool Steel *Ex. P-20, H-13, S-7*	400 - 700	.002 - .005
Tool Steel *Ex. A-2, A-6, D-2, M-2*	300 - 600	.002 - .004
Stainless Steel *Ex. 304, 316, 420, 15-5PH, 17-4PH*	300 - 600	.002 - .004
Iron *Ex. Cast, Ductile, Nodular*	600 - 1000	.003 - .007
Nickel & Titanium Alloy *Ex. Inconel, Hastelloy, TI-6AL-4V*	120 - 180	.001 - .003
Non-Ferrous Metal *Ex. Aluminum, Bronze, Brass*	1000 - 2500	.003 - .008

Arbor Mount

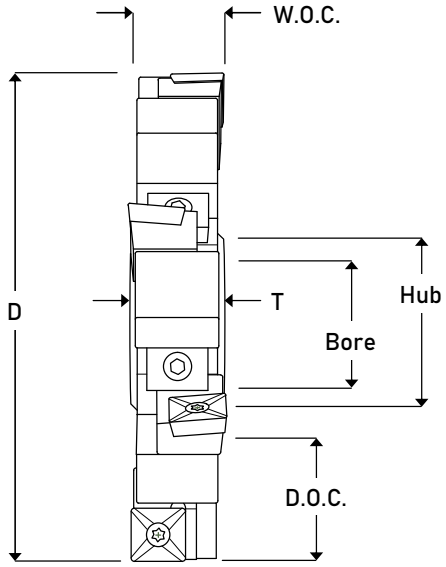

L.H. Cartridge

R.H. Cartridge

Series #4

Cutters can be used as: Half Side Mill (RH or LH)
Full Slot Mill (W.O.C. Required)

Tool Info.

Tool #	D	Flutes	W.O.C.	D.O.C.	Bore	Key	Hub	T
SC-604	6.000	8	.937 - 1.187	1.870	1.500	.375	2.000	1.100
SC-804	8.000	12	.937 - 1.187	2.870	1.500	.375	2.000	1.100
SC-1004	10.000	14	.937 - 1.187	3.870	1.500	.375	2.000	1.100

Notes:
-Tool must be run as 1/2 the number of flutes effective when set for a full slot.
-Initial W.O.C. to be set with dial indicator
(K-Tool Inc. will set width at no charge before shipping).

Tool #	Cartridge	Wedge	Wedge Screw	Insert
SC-604				
SC-804	532C-RH/LH	4	5161D	SPEB-532PA
SC-1004				

Positive Top Insert

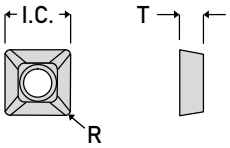

Insert Info.

Insert #	I.C.	T	R	Screw	Wrench	Grade
SPEB-532PA	.625	.187	.031	838T	T-20	D66 K11 K22

Speed and Feed Info.

Material	S.F.M.	I.P.T.
Mild & Low Carbon Steel *Ex. 1018, 1020, 1117, 1141, 12L14*	800 - 1200	.002 - .006
High Carbon & Alloy Steel *Ex. 1045, 4140, 4340, 52100, 8620*	500 - 800	.002 - .005
Lower Carbon Tool Steel *Ex. P-20, H-13, S-7*	400 - 700	.002 - .005
Tool Steel *Ex. A-2, A-6, D-2, M-2*	300 - 600	.002 - .004
Stainless Steel *Ex. 304, 316, 420, 15-5PH, 17-4PH*	300 - 600	.002 - .004
Iron *Ex. Cast, Ductile, Nodular*	600 - 1000	.003 - .007
Nickel & Titanium Alloy *Ex. Inconel, Hastelloy, TI-6AL-4V*	120 - 180	.001 - .003
Non-Ferrous Metal *Ex. Aluminum, Bronze, Brass*	1000 - 2500	.003 - .008

Shell Mount

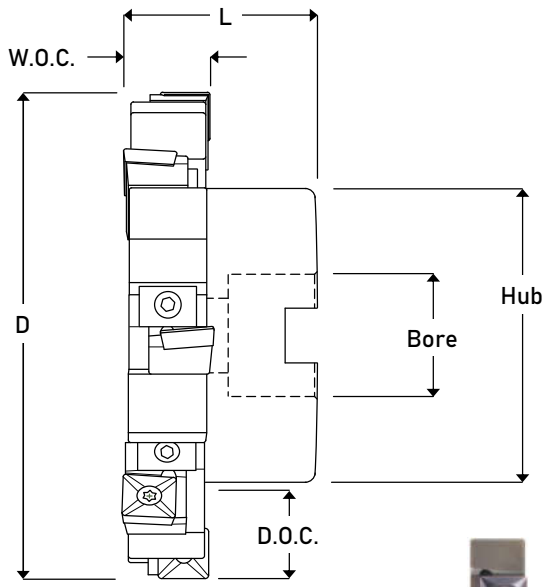

L.H. Cartridge

R.H. Cartridge

Series #4

Cutters can be used as: Half Side Mill (RH or LH)
Full Slot Mill (W.O.C. Required)

Tool Info.

Tool #	D	Flutes	W.O.C.	D.O.C.	Bore	Key	Hub	L
SCSM-504	5.000	6	.937 - 1.187	1.062	1.250	.500	2.625	1.750
SCSM-604	6.000	8	.937 - 1.187	1.012	1.500	.625	3.625	2.250
SCSM-804	8.000	12	.937 - 1.187	1.975	1.500	.625	3.800	2.250

Notes:
-Tool must be run as 1/2 the number of flutes effective when set for a full slot.
-Initial W.O.C. to be set with dial indicator
(K-Tool Inc. will set width at no charge before shipping).

Tool #	Cartridge	Wedge	Wedge Screw	Insert
SCSM-504				
SCSM-604	532C-RH/LH	4	5161D	SPEB-532PA
SCSM-808				

Positive Top Insert

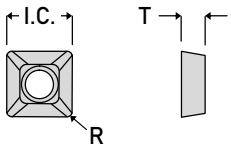

Insert Info.

Insert #	I.C.	T	R	Screw	Wrench	Grade
SPEB-532PA	.625	.187	.031	838T	T-20	D66 K11 K22

Speed and Feed Info.

Material	S.F.M.	I.P.T.
Mild & Low Carbon Steel *Ex. 1018, 1020, 1117, 1141, 12L14*	800 - 1200	.002 - .006
High Carbon & Alloy Steel *Ex. 1045, 4140, 4340, 52100, 8620*	500 - 800	.002 - .005
Lower Carbon Tool Steel *Ex. P-20, H-13, S-7*	400 - 700	.002 - .005
Tool Steel *Ex. A-2, A-6, D-2, M-2*	300 - 600	.002 - .004
Stainless Steel *Ex. 304, 316, 420, 15-5PH, 17-4PH*	300 - 600	.002 - .004
Iron *Ex. Cast, Ductile, Nodular*	600 - 1000	.003 - .007
Nickel & Titanium Alloy *Ex. Inconel, Hastelloy, TI-6AL-4V*	120 - 180	.001 - .003
Non-Ferrous Metal *Ex. Aluminum, Bronze, Brass*	1000 - 2500	.003 - .008

Radius Slotting Cutters

Ground & Molded Inserts Available
Round Inserts Reduce Cutting Pressure

K-Tool, Inc.

Arbor Mount

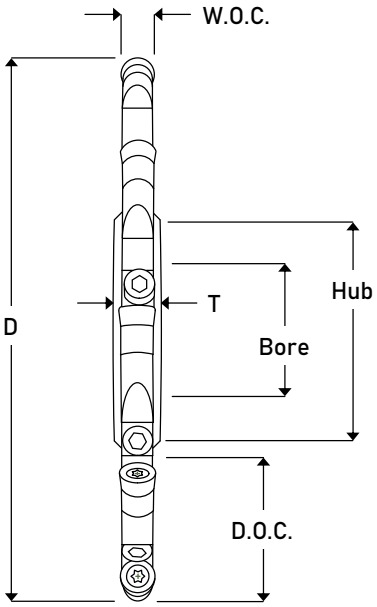

Series #2

Tool Info.

Tool #	D	Flutes	W.O.C.	D.O.C.	Bore	Key	Hub	T
SCR-302	3.000	8	.250	.750	1.000	.250	1.400	.340
SCR-402	4.000	10	.250	1.090	1.250	.312	1.620	.340
SCR-502	5.000	12	.250	1.590	1.250	.312	1.620	.340
SCR-602	6.000	14	.250	1.900	1.500	.375	2.000	.340

Tool #	Cartridge	Wedge	Wedge Screw	Molded Insert	Ground Insert
SCR-302	N/A - Solid Pocket Design			RCEB-22	RCEB-22G
SCR-402	22R	15	612		
SCR-502	22R	15	612		
SCR-602	22R	15	612		

Note:
Cartridges will be preset in body before shipping at no extra charge.

Positive Top Inserts

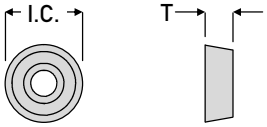

Insert Info.

Insert #	I.C.	T	Screw	Wrench	Grades
RCEB-22	.250	.125	314T	T-8	K11
RCEB-22G	.250	.125	314T	T-8	B1M K11 K22

Speed and Feed Info.

Material	S.F.M.	I.P.T.
Mild & Low Carbon Steel *Ex. 1018, 1020, 1117, 1141, 12L14*	800 - 1200	.002 - .006
High Carbon & Alloy Steel *Ex. 1045, 4140, 4340, 52100, 8620*	500 - 800	.002 - .005
Lower Carbon Tool Steel *Ex. P-20, H-13, S-7*	400 - 700	.002 - .005
Tool Steel *Ex. A-2, A-6, D-2, M-2*	300 - 600	.002 - .004
Stainless Steel *Ex. 304, 316, 420, 15-5PH, 17-4PH*	300 - 600	.002 - .004
Iron *Ex. Cast, Ductile, Nodular*	600 - 1000	.003 - .007
Nickel & Titanium Alloy *Ex. Inconel, Hastelloy, TI-6AL-4V*	120 - 180	.001 - .003
Non-Ferrous Metal *Ex. Aluminum, Bronze, Brass*	1000 - 2500	.003 - .008

Shell Mount

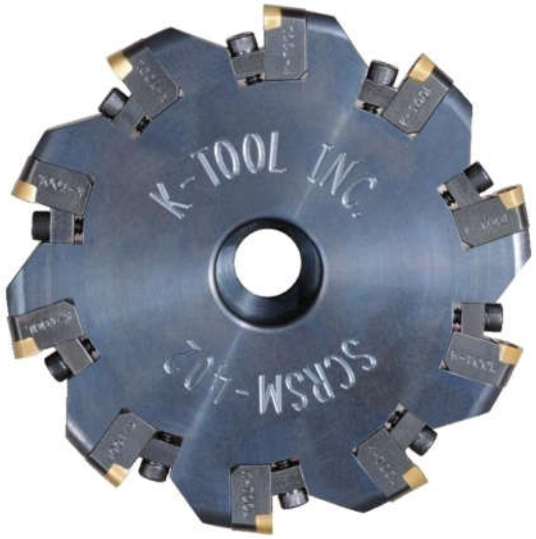

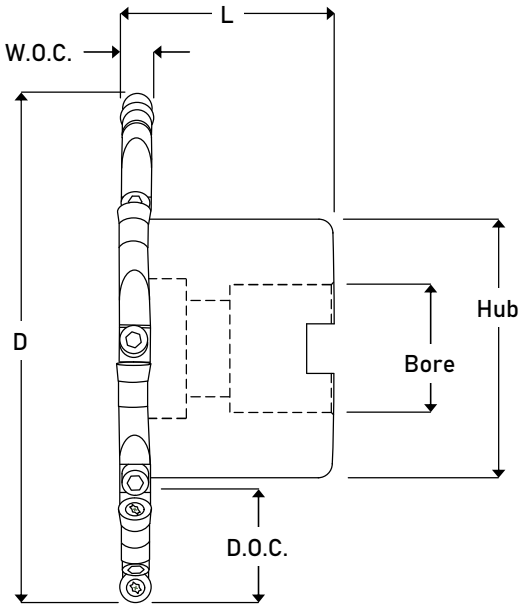

Series #2

Tool Info.								
Tool #	D	Flutes	W.O.C.	D.O.C.	Bore	Key	Hub	L
SCRSM-302	3.000	8	.250	.750	.500	.250	1.375	1.500
SCRSM-402	4.000	10	.250	.875	1.000	.375	2.000	1.625
SCRSM-502	5.000	12	.250	1.062	1.250	.500	2.625	1.750
SCRSM-602	6.000	14	.250	.937	1.500	.625	3.800	2.250

Tool #	Cartridge	Wedge	Wedge Screw	Molded Insert	Ground Insert
SCRSM-302	N/A - Solid Pocket Design			RCEB-22	RCEB-22G
SCRSM-402	22R	15	612		
SCRSM-502	22R	15	612		
SCRSM-602	22R	15	612		

Note:
Cartridges will be preset in body before shipping at no extra charge.

Positive Top Inserts

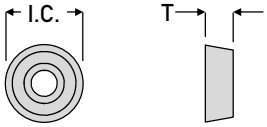

Insert Info.					
Insert #	I.C.	T	Screw	Wrench	Grades
RCEB-22	.250	.125	314T	T-8	K11
RCEB-22G	.250	.125	314T	T-8	B1M K11 K22

Speed and Feed Info.		
Material	S.F.M.	I.P.T.
Mild & Low Carbon Steel *Ex. 1018, 1020, 1117, 1141, 12L14*	800 - 1200	.002 - .006
High Carbon & Alloy Steel *Ex. 1045, 4140, 4340, 52100, 8620*	500 - 800	.002 - .005
Lower Carbon Tool Steel *Ex. P-20, H-13, S-7*	400 - 700	.002 - .005
Tool Steel *Ex. A-2, A-6, D-2, M-2*	300 - 600	.002 - .004
Stainless Steel *Ex. 304, 316, 420, 15-5PH, 17-4PH*	300 - 600	.002 - .004
Iron *Ex. Cast, Ductile, Nodular*	600 - 1000	.003 - .007
Nickel & Titanium Alloy *Ex. Inconel, Hastelloy, TI-6AL-4V*	120 - 180	.001 - .003
Non-Ferrous Metal *Ex. Aluminum, Bronze, Brass*	1000 - 2500	.003 - .008

K-Tool, Inc.

Arbor Mount

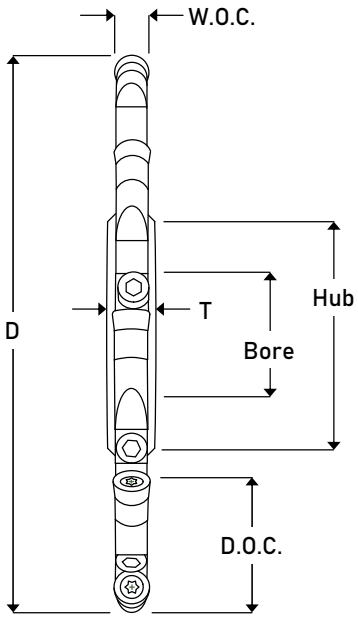

Series #25

Tool Info.								
Tool #	D	Flutes	W.O.C.	D.O.C.	Bore	Key	Hub	T
SCR-325	3.000	7	.312	.750	1.000	.250	1.400	.375
SCR-425	4.000	9	.312	1.093	1.250	.312	1.625	.375
SCR-525	5.000	10	.312	1.590	1.250	.312	1.625	.375
SCR-625	6.000	12	.312	1.900	1.500	.375	2.000	.375

Tool #	Cartridge	Wedge	Wedge Screw	Ground Insert
SCR-325	N/A - Solid Pocket Design			RCEB-25G
SCR-425	25R	15	612	
SCR-525	25R	15	612	
SCR-625	25R	15	612	

Note:
Cartridges will be preset in body before shipping at no extra charge.

Positive Top Inserts

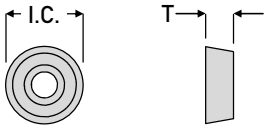

Insert Info.					
Insert #	I.C.	T	Screw	Wrench	Grades
RCEB-25G	.312	.125	314T	T-8	B1M K11 K22

Speed and Feed Info.		
Material	S.F.M.	I.P.T.
Mild & Low Carbon Steel *Ex. 1018, 1020, 1117, 1141, 12L14*	800 - 1200	.002 - .006
High Carbon & Alloy Steel *Ex. 1045, 4140, 4340, 52100, 8620*	500 - 800	.002 - .005
Lower Carbon Tool Steel *Ex. P-20, H-13, S-7*	400 - 700	.002 - .005
Tool Steel *Ex. A-2, A-6, D-2, M-2*	300 - 600	.002 - .004
Stainless Steel *Ex. 304, 316, 420, 15-5PH, 17-4PH*	300 - 600	.002 - .004
Iron *Ex. Cast, Ductile, Nodular*	600 - 1000	.003 - .007
Nickel & Titanium Alloy *Ex. Inconel, Hastelloy, TI-6AL-4V*	120 - 180	.001 - .003
Non-Ferrous Metal *Ex. Aluminum, Bronze, Brass*	1000 - 2500	.003 - .008

Shell Mount

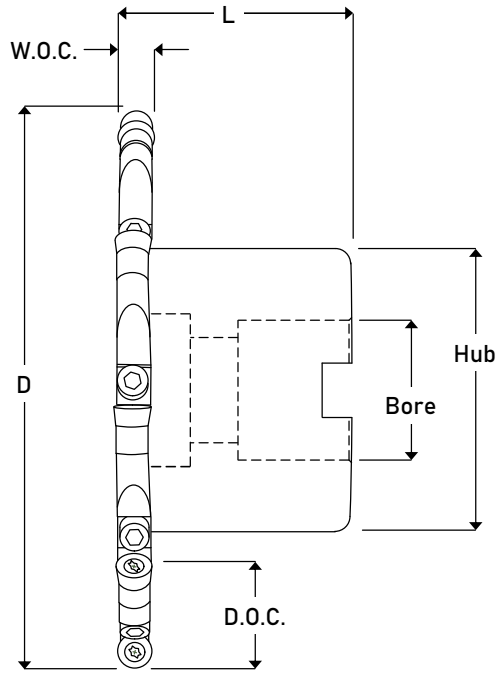

Series #25

Tool Info.								
Tool #	D	Flutes	W.O.C.	D.O.C.	Bore	Key	Hub	L
SCRSM-325	3.000	7	.312	.750	.500	.250	1.375	1.500
SCRSM-425	4.000	9	.312	.875	1.000	.375	2.000	1.625
SCRSM-525	5.000	10	.312	1.062	1.250	.500	2.625	1.750
SCRSM-625	6.000	12	.312	.937	1.500	.625	3.800	2.250

Tool #	Cartridge	Wedge	Wedge Screw	Ground Insert
SCRSM-325	N/A - Solid Pocket Design			
SCRSM-425	25R	15	612	RCEB-25G
SCRSM-525	25R	15	612	
SCRSM-625	25R	15	612	

Note:
Cartridges will be preset in body before shipping at no extra charge.

Positive Top Inserts

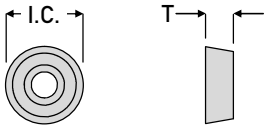

Insert Info.					
Insert #	I.C.	T	Screw	Wrench	Grades
RCEB-25G	.312	.125	314T	T-8	B1M K11 K22

Speed and Feed Info.		
Material	S.F.M.	I.P.T.
Mild & Low Carbon Steel *Ex. 1018, 1020, 1117, 1141, 12L14*	800 - 1200	.002 - .006
High Carbon & Alloy Steel *Ex. 1045, 4140, 4340, 52100, 8620*	500 - 800	.002 - .005
Lower Carbon Tool Steel *Ex. P-20, H-13, S-7*	400 - 700	.002 - .005
Tool Steel *Ex. A-2, A-6, D-2, M-2*	300 - 600	.002 - .004
Stainless Steel *Ex. 304, 316, 420, 15-5PH, 17-4PH*	300 - 600	.002 - .004
Iron *Ex. Cast, Ductile, Nodular*	600 - 1000	.003 - .007
Nickel & Titanium Alloy *Ex. Inconel, Hastelloy, TI-6AL-4V*	120 - 180	.001 - .003
Non-Ferrous Metal *Ex. Aluminum, Bronze, Brass*	1000 - 2500	.003 - .008

Arbor Mount

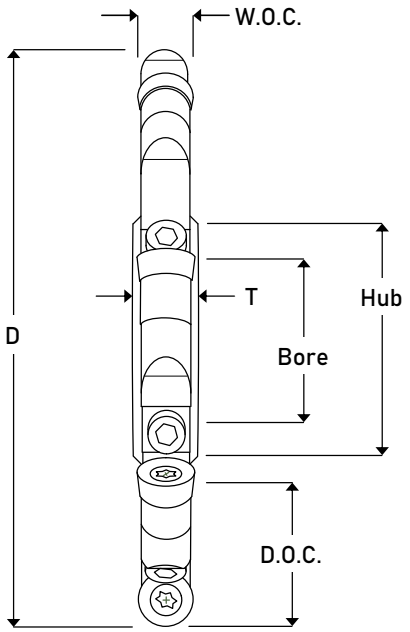

Series #3

Tool Info.

Tool #	D	Flutes	W.O.C.	D.O.C.	Bore	Key	Hub	T
SCR-303	3.000	6	.375	.750	1.000	.250	1.620	.430
SCR-403	4.000	8	.375	1.090	1.250	.312	1.620	.430
SCR-503	5.000	10	.375	1.590	1.250	.312	1.620	.430
SCR-603	6.000	12	.375	1.900	1.500	.375	2.000	.430
SCR-803	8.000	16	.375	2.900	1.500	.375	2.000	.430

Tool #	Cartridge	Wedge	Wedge Screw	Molded Insert	Ground Insert
SCR-303	N/A - Solid Pocket Design				
SCR-403	325R	2	8		
SCR-503	325R	2	8	RCEB-325	RCEB-325G
SCR-603	325R	2	8		
SCR-803	325R	2	8		

Note:
Cartridges will be preset in body before shipping at no extra charge.

Positive Top Inserts

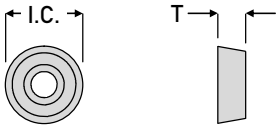

Insert Info.

Insert #	I.C.	T	Screw	Wrench	Grades
RCEB-325	.375	.156	538T	T-10	K11
RCEB-325G	.375	.156	538T	T-10	B1M K11 K22

Speed and Feed Info.

Material	S.F.M.	I.P.T.
Mild & Low Carbon Steel *Ex. 1018, 1020, 1117, 1141, 12L14*	800 - 1200	.002 - .006
High Carbon & Alloy Steel *Ex. 1045, 4140, 4340, 52100, 8620*	500 - 800	.002 - .005
Lower Carbon Tool Steel *Ex. P-20, H-13, S-7*	400 - 700	.002 - .005
Tool Steel *Ex. A-2, A-6, D-2, M-2*	300 - 600	.002 - .004
Stainless Steel *Ex. 304, 316, 420, 15-5PH, 17-4PH*	300 - 600	.002 - .004
Iron *Ex. Cast, Ductile, Nodular*	600 - 1000	.003 - .007
Nickel & Titanium Alloy *Ex. Inconel, Hastelloy, TI-6AL-4V*	120 - 180	.001 - .003
Non-Ferrous Metal *Ex. Aluminum, Bronze, Brass*	1000 - 2500	.003 - .008

Shell Mount

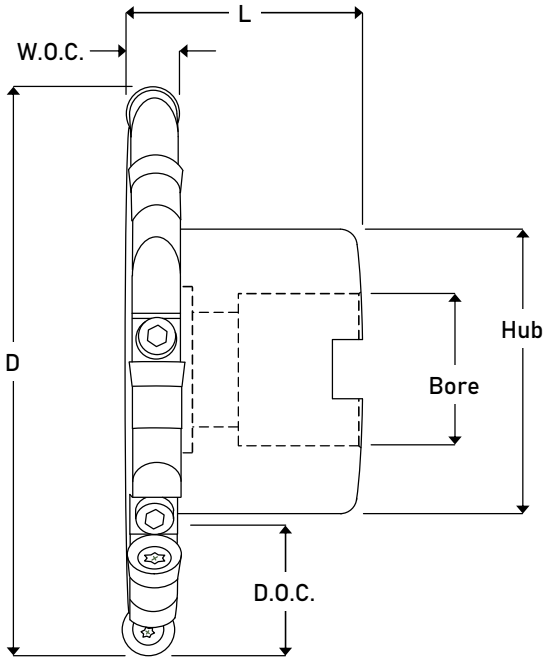

Series #3

Tool Info.

Tool #	D	Flutes	W.O.C.	D.O.C.	Bore	Key	Hub	L
SCRSM-303	3.000	6	.375	.750	.500	.250	1.375	1.500
SCRSM-403	4.000	8	.375	.875	1.000	.375	2.000	1.625
SCRSM-503	5.000	10	.375	1.062	1.250	.500	2.625	1.750
SCRSM-603	6.000	12	.375	.937	1.500	.625	3.800	2.250
SCRSM-803	8.000	16	.375	2.000	1.500	.625	3.800	2.250

Tool #	Cartridge	Wedge	Wedge Screw	Molded Insert	Ground Insert
SCR-303	N/A - Solid Pocket Design				
SCR-403	325R	2	8		
SCR-503	325R	2	8	RCEB-325	RCEB-325G
SCR-603	325R	2	8		
SCR-803	325R	2	8		

Note:
Cartridges will be preset in body before shipping at no extra charge.

Positive Top Inserts

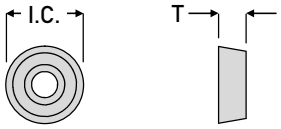

Insert Info.

Insert #	I.C.	T	Screw	Wrench	Grades
RCEB-325	.375	.156	538T	T-10	K11
RCEB-325G	.375	.156	538T	T-10	B1M K11 K22

Speed and Feed Info.

Material	S.F.M.	I.P.T.
Mild & Low Carbon Steel *Ex. 1018, 1020, 1117, 1141, 12L14*	800 - 1200	.002 - .006
High Carbon & Alloy Steel *Ex. 1045, 4140, 4340, 52100, 8620*	500 - 800	.002 - .005
Lower Carbon Tool Steel *Ex. P-20, H-13, S-7*	400 - 700	.002 - .005
Tool Steel *Ex. A-2, A-6, D-2, M-2*	300 - 600	.002 - .004
Stainless Steel *Ex. 304, 316, 420, 15-5PH, 17-4PH*	300 - 600	.002 - .004
Iron *Ex. Cast, Ductile, Nodular*	600 - 1000	.003 - .007
Nickel & Titanium Alloy *Ex. Inconel, Hastelloy, TI-6AL-4V*	120 - 180	.001 - .003
Non-Ferrous Metal *Ex. Aluminum, Bronze, Brass*	1000 - 2500	.003 - .008

Arbor Mount

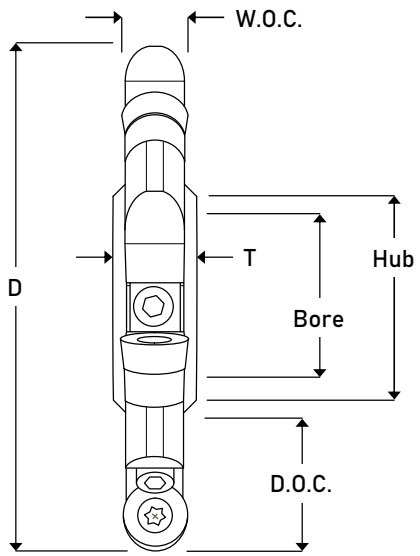

Series #4

Tool Info.

Tool #	D	Flutes	W.O.C.	D.O.C.	Bore	Key	Hub	T
SCR-304	3.000	5	.500	.750	1.000	.250	1.400	.625
SCR-404	4.000	6	.500	1.090	1.250	.312	1.620	.625
SCR-504	5.000	8	.500	1.590	1.250	.312	1.620	.625
SCR-604	6.000	10	.500	1.900	1.500	.375	2.000	.625
SCR-804	8.000	12	.500	2.900	1.500	.375	2.000	.625
SCR-1004	10.000	16	.500	3.900	1.500	.375	2.000	.625

Tool #	Cartridge	Wedge	Wedge Screw	Molded Insert	Ground Insert
SCR-304	N/A - Solid Pocket Design				
SCR-404	435R	3	10		
SCR-504	435R	3	10	RCEB-435	RCEB-435G
SCR-604	435R	3	10		
SCR-804	435R	3	10		
SCR-1004	435R	3	10		

Note:
Cartridges will be preset in body before shipping at no extra charge.

Positive Top Inserts

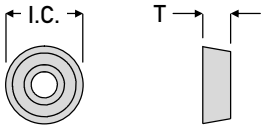

Insert Info.

Insert #	I.C.	T	Screw	Wrench	Grades
RCEB-435	.500	.220	838T	T-20	K11
RCEB-435G	.500	.220	838T	T-20	B1M D66 K11 K22

Speed and Feed Info.

Material	S.F.M.	I.P.T.
Mild & Low Carbon Steel *Ex. 1018, 1020, 1117, 1141, 12L14*	800 - 1200	.002 - .006
High Carbon & Alloy Steel *Ex. 1045, 4140, 4340, 52100, 8620*	500 - 800	.002 - .005
Lower Carbon Tool Steel *Ex. P-20, H-13, S-7*	400 - 700	.002 - .005
Tool Steel *Ex. A-2, A-6, D-2, M-2*	300 - 600	.002 - .004
Stainless Steel *Ex. 304, 316, 420, 15-5PH, 17-4PH*	300 - 600	.002 - .004
Iron *Ex. Cast, Ductile, Nodular*	600 - 1000	.003 - .007
Nickel & Titanium Alloy *Ex. Inconel, Hastelloy, TI-6AL-4V*	120 - 180	.001 - .003
Non-Ferrous Metal *Ex. Aluminum, Bronze, Brass*	1000 - 2500	.003 - .008

Shell Mount

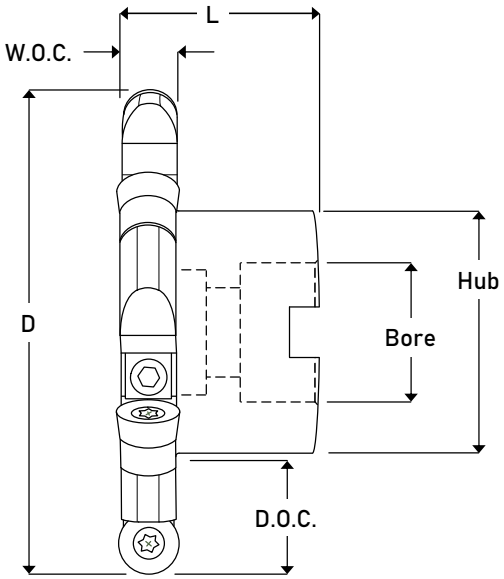

Series #4

Tool Info.

Tool #	D	Flutes	W.O.C.	D.O.C.	Bore	Key	Hub	L
SCRSM-304	3.000	5	.500	.750	.500	.250	1.375	1.500
SCRSM-404	4.000	6	.500	.875	1.000	.375	2.000	1.625
SCRSM-504	5.000	8	.500	1.062	1.250	.500	2.625	1.750
SCRSM-604	6.000	10	.500	.937	1.500	.625	3.800	2.250
SCRSM-804	8.000	12	.500	2.000	1.500	.625	3.800	2.250

Tool #	Cartridge	Wedge	Wedge Screw	Molded Insert	Ground Insert
SCRSM-304	N/A - Solid Pocket Design				
SCRSM-404	435R	3	10		
SCRSM-504	435R	3	10	RCEB-435	RCEB-435G
SCRSM-604	435R	3	10		
SCRSM-804	435R	3	10		

Note:
Cartridges will be preset in body before shipping at no extra charge.

Positive Top Inserts

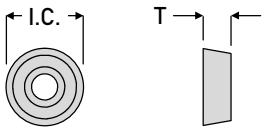

Insert Info.

Insert #	I.C.	T	Screw	Wrench	Grades
RCEB-435	.500	.220	838T	T-20	K11
RCEB-435G	.500	.220	838T	T-20	B1M K11 K22

Speed and Feed Info.

Material	S.F.M.	I.P.T.
Mild & Low Carbon Steel *Ex. 1018, 1020, 1117, 1141, 12L14*	800 - 1200	.002 - .006
High Carbon & Alloy Steel *Ex. 1045, 4140, 4340, 52100, 8620*	500 - 800	.002 - .005
Lower Carbon Tool Steel *Ex. P-20, H-13, S-7*	400 - 700	.002 - .005
Tool Steel *Ex. A-2, A-6, D-2, M-2*	300 - 600	.002 - .004
Stainless Steel *Ex. 304, 316, 420, 15-5PH, 17-4PH*	300 - 600	.002 - .004
Iron *Ex. Cast, Ductile, Nodular*	600 - 1000	.003 - .007
Nickel & Titanium Alloy *Ex. Inconel, Hastelloy, TI-6AL-4V*	120 - 180	.001 - .003
Non-Ferrous Metal *Ex. Aluminum, Bronze, Brass*	1000 - 2500	.003 - .008

Arbor Mount

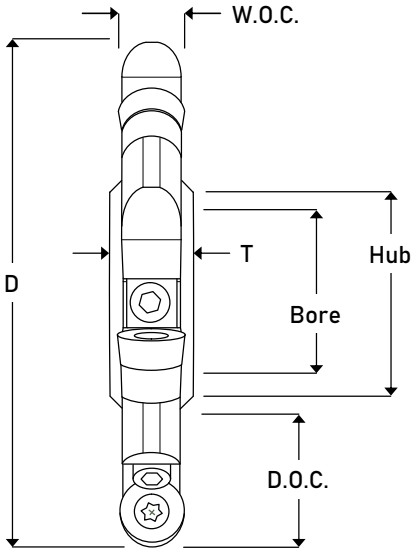

Series #45

Tool Info.

Tool #	D	Flutes	W.O.C.	D.O.C.	Bore	Key	Hub	T
SCR-645	6.000	5	.625	1.900	1.500	.375	2.000	.750
SCR-845	8.000	10	.625	2.900	1.500	.375	2.000	.750
SCR-1045	10.000	12	.625	3.900	1.500	.375	2.000	.750

Tool #	Cartridge	Wedge	Wedge Screw	Insert
SCR-645				
SCR-845	53R	35	141D	RCEB-53G
SCR-1045				

Note:
Cartridges will be preset in body before shipping at no extra charge.

Positive Top Insert

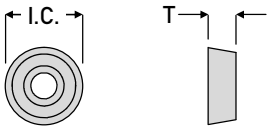

Insert Info.

Insert #	I.C.	T	Screw	Wrench	Grades
RCEB-53G	.625	.220	838T	T-20	B1M K11 K22

Speed and Feed Info.

Material	S.F.M.	I.P.T.
Mild & Low Carbon Steel *Ex. 1018, 1020, 1117, 1141, 12L14*	800 - 1200	.002 - .006
High Carbon & Alloy Steel *Ex. 1045, 4140, 4340, 52100, 8620*	500 - 800	.002 - .005
Lower Carbon Tool Steel *Ex. P-20, H-13, S-7*	400 - 700	.002 - .005
Tool Steel *Ex. A-2, A-6, D-2, M-2*	300 - 600	.002 - .004
Stainless Steel *Ex. 304, 316, 420, 15-5PH, 17-4PH*	300 - 600	.002 - .004
Iron *Ex. Cast, Ductile, Nodular*	600 - 1000	.003 - .007
Nickel & Titanium Alloy *Ex. Inconel, Hastelloy, TI-6AL-4V*	120 - 180	.001 - .003
Non-Ferrous Metal *Ex. Aluminum, Bronze, Brass*	1000 - 2500	.003 - .008

Shell Mount

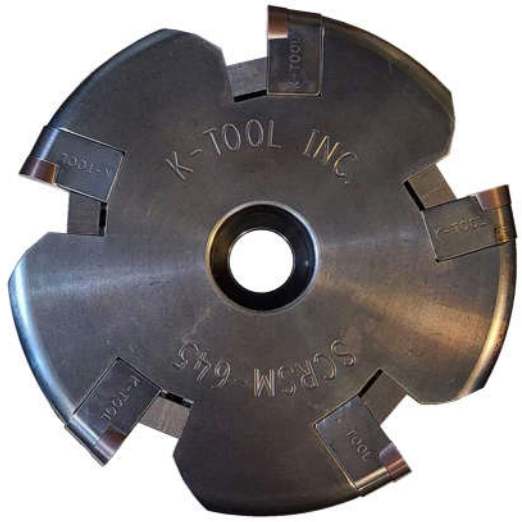

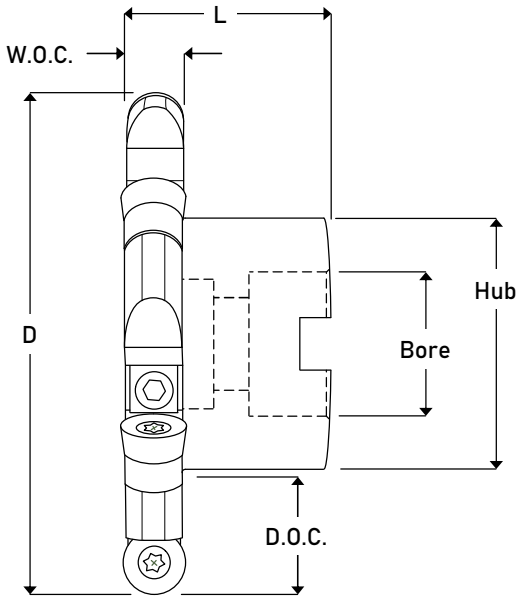

Series #45

Tool Info.								
Tool #	D	Flutes	W.O.C.	D.O.C.	Bore	Key	Hub	L
SCRSM-645	6.000	5	.625	.938	1.500	.625	3.800	2.250
SCRSM-845	8.000	10	.625	2.000	1.500	.625	3.800	2.250
SCRSM-1045	10.000	12	.625	3.000	1.500	.625	3.800	2.875

Tool #	Cartridge	Wedge	Wedge Screw	Insert
SCRSM-645				
SCRSM-845	53R	35	141D	RCEB-53G
SCRSM-1045				

Note:
Cartridges will be preset in body before shipping at no extra charge.

Positive Top Insert

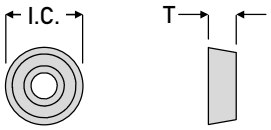

Insert Info.					
Insert #	I.C.	T	Screw	Wrench	Grades
RCEB-53G	.625	.220	838T	T-20	B1M K11 K22

Speed and Feed Info.		
Material	S.F.M.	I.P.T.
Mild & Low Carbon Steel *Ex. 1018, 1020, 1117, 1141, 12L14*	800 - 1200	.002 - .006
High Carbon & Alloy Steel *Ex. 1045, 4140, 4340, 52100, 8620*	500 - 800	.002 - .005
Lower Carbon Tool Steel *Ex. P-20, H-13, S-7*	400 - 700	.002 - .005
Tool Steel *Ex. A-2, A-6, D-2, M-2*	300 - 600	.002 - .004
Stainless Steel *Ex. 304, 316, 420, 15-5PH, 17-4PH*	300 - 600	.002 - .004
Iron *Ex. Cast, Ductile, Nodular*	600 - 1000	.003 - .007
Nickel & Titanium Alloy *Ex. Inconel, Hastelloy, TI-6AL-4V*	120 - 180	.001 - .003
Non-Ferrous Metal *Ex. Aluminum, Bronze, Brass*	1000 - 2500	.003 - .008

Arbor Mount

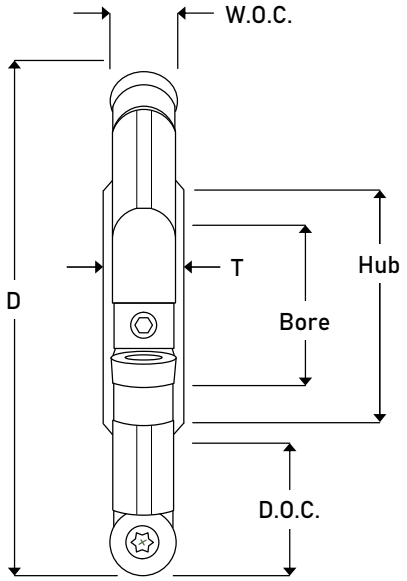

Series #5

Tool Info.

Tool #	D	Flutes	W.O.C.	D.O.C.	Bore	Key	Hub	T
SCR-605	6.000	5	.750	1.687	1.500	.375	2.000	1.000
SCR-805	8.000	7	.750	2.687	1.500	.375	2.000	1.000
SCR-1005	10.000	8	.750	3.687	1.500	.375	2.000	1.000

Tool #	Cartridge	Wedge	Wedge Screw	Insert
SCR-605				
SCR-805	64R	4	5161D	RCEB-64
SCR-1005				

Note:
Cartridges will be preset in body before shipping at no extra charge.

Positive Top Insert

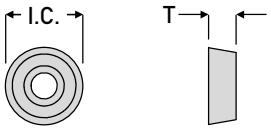

Insert Info.

Insert #	I.C.	T	Screw	Wrench	Grades
RCEB-64	.750	.250	1012T	T-25	K11

Speed and Feed Info.

Material	S.F.M.	I.P.T.
Mild & Low Carbon Steel *Ex. 1018, 1020, 1117, 1141, 12L14*	800 - 1200	.002 - .006
High Carbon & Alloy Steel *Ex. 1045, 4140, 4340, 52100, 8620*	500 - 800	.002 - .005
Lower Carbon Tool Steel *Ex. P-20, H-13, S-7*	400 - 700	.002 - .005
Tool Steel *Ex. A-2, A-6, D-2, M-2*	300 - 600	.002 - .004
Stainless Steel *Ex. 304, 316, 420, 15-5PH, 17-4PH*	300 - 600	.002 - .004
Iron *Ex. Cast, Ductile, Nodular*	600 - 1000	.003 - .007
Nickel & Titanium Alloy *Ex. Inconel, Hastelloy, TI-6AL-4V*	120 - 180	.001 - .003
Non-Ferrous Metal *Ex. Aluminum, Bronze, Brass*	1000 - 2500	.003 - .008

Shell Mount

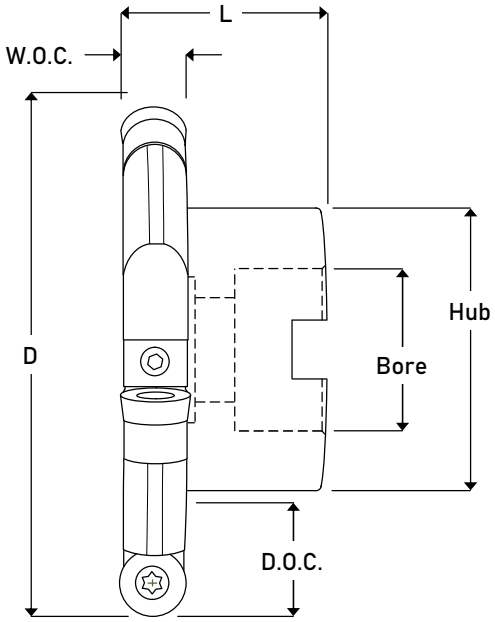

Series #5

Tool Info.								
Tool #	D	Flutes	W.O.C.	D.O.C.	Bore	Key	Hub	L
SCRSM-605	6.000	5	.750	1.250	1.500	.625	3.200	2.250
SCRSM-805	8.000	7	.750	2.000	1.500	.625	3.800	2.250
SCRSM-1005	10.000	8	.750	3.000	1.500	.625	3.800	2.875

Tool #	Cartridge	Wedge	Wedge Screw	Insert
SCRSM-605				
SCRSM-805	64R	4	5161D	RCEB-64
SCRSM-1005				

Note:
Cartridges will be preset in body before shipping at no extra charge.

Positive Top Insert

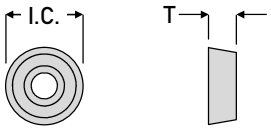

Insert Info.					
Insert #	I.C.	T	Screw	Wrench	Grades
RCEB-64	.750	.250	1012T	T-25	K11

Speed and Feed Info.		
Material	S.F.M.	I.P.T.
Mild & Low Carbon Steel *Ex. 1018, 1020, 1117, 1141, 12L14*	800 - 1200	.002 - .006
High Carbon & Alloy Steel *Ex. 1045, 4140, 4340, 52100, 8620*	500 - 800	.002 - .005
Lower Carbon Tool Steel *Ex. P-20, H-13, S-7*	400 - 700	.002 - .005
Tool Steel *Ex. A-2, A-6, D-2, M-2*	300 - 600	.002 - .004
Stainless Steel *Ex. 304, 316, 420, 15-5PH, 17-4PH*	300 - 600	.002 - .004
Iron *Ex. Cast, Ductile, Nodular*	600 - 1000	.003 - .007
Nickel & Titanium Alloy *Ex. Inconel, Hastelloy, TI-6AL-4V*	120 - 180	.001 - .003
Non-Ferrous Metal *Ex. Aluminum, Bronze, Brass*	1000 - 2500	.003 - .008

All Torque Specs are in IN/LB

Screw #	Torx Size	Recommended Torque	Max Torque
164T	T-6	2.7 - 3.3	5.5
300T	T-8	5.7 - 6.8	11.3
314T	T-8	5.7 - 6.8	11.3
414T	T-10	10 - 11.9	19.9
438T	T-10	10 - 11.9	19.9
538T	T-10	10 - 11.9	19.9
560T	T-10	10 - 11.9	19.9
5625T	T-10	10 - 11.9	19.9
614T	T-15	15.3 - 18.3	30.5
638T	T-15	15.3 - 18.3	30.5
838T	T-20	22.8 - 27.4	45.6
1012T	T-25	33.6 - 40.4	67.3
1412T	5/32 Allen	77.4 - 92.9	154.9

To receive a test tool number, submit the completed information below to K-Tool, Inc. by Email or Phone.
Our tech support staff will be in contact with you within 1 business day to provide a
test tool number or to get additional information needed to validate the test.
Note: Test tool numbers will be issued for standard tools only.

The form can also be found on our website at www.ktoolinc.com under Technical Support.

Distributor Contact Information	
Distributor	
Salesperson	
Email	
Phone #	
Fax #	

End User Contact Information	
Company Name	
Contact	
Email	
Phone #	
Fax #	

Requested Test Tool	
Tool#	
Insert#	
Additional Information	

Material Information	
Material	
Hardness	
Additional Information	

Cutting Parameters	
Width of Cut	
Depth of Cut	
Length of cut	

Machine Information	
Machine Type	☐ Mill ☐ Lathe
Horsepower	
Spindle Taper	
Coolant Thru	
Flood Coolant	
Coolant Pressure	

Tool Holder Information			
Holder Type	☐ Collet	☐ Milling Chuck	☐ End Mill Holder
Holder Length	☐ Stub Length	☐ Standard Length	☐ Extended Length
Projection Length			

Provide a brief description of how the tool will be used.

TEST TOOL POLICY

We will ship cutter bodies and inserts on performance purchase order numbers after the guaranteed test form information is supplied. K-Tool, Inc. will cover the tool bodies only. No credit will be given on used inserts, however credit will be issued on unused inserts. Items will be invoiced at the time of shipment. All test tools must be paid for or returned within 60 days.

www.ktoolinc.com

Your Local K-Tool Inc. Distributor

K-Tool Inc.
99 Enterprise Drive
New Oxford, Pennsylvania 17350
Phone: (800) 377-3056
Email: info@ktoolinc.com