Whitney Office
4581 FM 933- PO Box 2480
Whitney TX 76692-5480
Tel: 254-694-5237 Fax: 254-694-4062
Toll Free: 888-850-6551

HILCO Electric Cooperative, Inc.

Itasca Office
115 E Main St/ PO Box 127
Itasca TX 76055
Tel: 254-687-2331 Fax 254-687-2428
Toll Free: 800-338-6425

Elm Mott Office
298 S Connally Drive
Elm Mott TX 76640
Fax: 254-829-1448

Serving our Members with Pride since 1937

New Construction Service Application

Midlothian Office
300A Sillken Crossing
Midlothian TX 76065
Tel: 972-723-2900 Fax 972-723-2911

Connection Fee $125.00

IF THIS APPLICATION IS NOT COMPLETED IN A HILCO OFFICE, THE APPLICATION MUST BE NOTARIZED BEFORE ELECTRIC SERVICE WILL BE ESTABLISHED

Service Address _____ **Date Requested** _____

_____ **Date Needed** _____

City **State** **Zip**

Directions, Subdivision or Special Instructions _____

_____

Will your service be: Overhead _____ Underground _____

	Applicant Information	**Co-Applicant Information**
Name **or** Business Name		
Home Phone		
Cell Phone		
Email Address		
Social Security# **or** Federal Tax ID		
Date of Birth		
Driver's License		
Place of Employment		
Business Phone		
Business Fax		

Mailing Address _____

ONLY IF DIFFERENT THAN SERVICE ADDRESS _____

City State Zip

By signing the application, I/we accept membership in HILCO Electric Cooperative, Inc.; authorize HILCO Electric Cooperative, Inc. to utilize third parties to acquire my/our consumer information, consumer reports, and credit worthiness scores for purpose of determining credit worthiness; and agree to adhere to the bylaws and Tariff of the cooperative. I/We understand and agree that any credit granted shall be paid promptly in accordance with terms and agreements and that late fees may apply if payment is not received. I/We further understand and agree that in event of default, I/we will be responsible for reasonable collection charges, court costs, and/or attorney fees incurred to collect the debt.**

Applicant's Signature _____ _____ Date

Co-Applicant's Signature _____ _____ Date

Would You like to Participate in Operation Round Up _____ **Yes** _____ **No**

Every month, the additional pennies, nickels and dimes are added to a special fund to help organizations in our service area. A committee, representing all seven districts in HILCO's service area, will be responsible for deciding where the funds are to be allocated. Once the committee allocates the funds, selected community and charitable organizations will receive the proceeds. We will keep you informed on how much is collected and where the funds are distributed.

State of _____
County of _____

Must be notarized before service can be established if faxed to our office

On this day _____, before me personally appeared _____ & _____

who certifies that he/she has the authority to enter into this agreement with HILCO Electric Cooperative, Inc.

Affix Seal Below

_____
Notary Public Printed Name

_____
Signature of Notary Public

*** All applicable areas must be completed. Incomplete applications will be returned.**
If "Date Needed" section is not completed, the new service will be scheduled per HILCO's routine course of business

New Commercial Service Request-Job Process

HILCO Electric Cooperative, Inc. thanks you for the opportunity to be your electric provider. We are committed in providing you the best electric service promptly and economically. To provide you with the best electric service possible, HILCO requires the following information prior to design, field staking and construction:

I. DESIGN:

- Completed Load Requirement Form.
- Site plans and electric designs (HILCO requires these to be sent electronically).

Notes: This information needs to be sent as soon as possible due to demand on some equipment and/or material. Some special equipment can have delays from 4 to 14 months. Due to the size of some electric loads, HILCO may need to possibly increase substation capacity; as well as, increasing electrical distribution facilities. Upon receiving all required design information, HILCO will provide an estimated cost for your facilities.

II. STAKING:

- Cooperative approved right-of-way easements.
- Survey points for grades, lot corners, and other locations necessary for installation of the electric system and transformer location.
- HILCO will need to know if flat work will interfere with HILCO overhead or underground facilities. HILCO will need to install its facilites before flat work is started.
- Location of all Member-owned underground facilites on project site.

III. CONSTRUCTION:

When staking is completed, you will be notified to approve the staking design. All of the Member construction costs must be paid before the job can be scheduled for construction. All easements and right-of-way will need to be allotted and cleared before construction can begin.

Notes: Any costs associated with changes that are made by the Member or its contractors to the electric utility design after the approval of the final design is received will be assumed by the Member.

Any changes in the surface grade, after HILCO has installed overhead or underground facilities, will result in the Member paying additional costs to re-install its facilities to the required depth.

HILCO Electric Cooperative, Inc
Load Requirement Form

Section A - PROJECT SITE

Name: _____ Contact Person: _____

Service Address: _____ City: _____

Phone: _____ Mobile: _____

Email Address: _____

Section B - ELECTRICIAN

Name: _____ Contact Person: _____

Phone: _____ Mobile: _____

Email Address: _____

Section C - SERVICE REQUESTED

Type of Structure: ☐ Residential ☐ Non-Residential ☐ Commercial / Industrial (Complete Section E)

**** Commercial and / or Three-Phase services must complete Section E ****

Service Type: ☐ Overhead Service ☐ Underground Service

Service Entrance Conductors: _____ Size _____ Type _____ Number of Conductors

Meter Base Size: ☐ 100 Amp Base ☐ 200 Amp Base ☐ 320 Amp Base ☐ Other (See Section E)

Note: All services require a main disconnect within 8 circuit feet of the meter base location. All services rated above a 320 amp meter base will be required to have an outside main disconnect.

Section D - ELECTRICAL LOAD INFORMATION (Please check the box that applies. If electric, then list the size.)

Total Square Footage _____

Square Footage with HVAC _____ (Square footage that is heated and cooled)

Comments or Additional Info:

HVAC ☐ Electric _____ kW or _____ Tons or ☐ Gas _____

Water Heater ☐ Electric _____ kW ☐ Tankless or ☐ Gas _____

Pool/Hot Tub Heater and Pumps ☐ Electric _____ kW and _____ HP or ☐ Gas _____

Fireplace ☐ Electric or ☐ Gas _____

EV Charger _____ kW

Cooktop/Oven ☐ Electric or ☐ Gas _____

General / Misc _____

Section E - SERVICE REQUESTED (Continued for Commercial Installations)

Voltage: Single Phase

☐ 120 / 240 3W

Three Phase

☐ 120 / 208 4W

☐ 120 / 240 4W

☐ 277 / 480 4W

Service Entrance Conductors: _____Size _____Type _____ Number of Conductors

Meter Base Size:

☐ 100 Amp Base (see notes 1 & 7)

☐ 200 Amp Base (see note 1 & 7)

☐ 320 Amp Base (see notes 1 & 7)

☐ Transocket (see notes 1, 2, 6, & 7)

☐ CT on Pole (see notes 1, 2, 3, & 4)

☐ CT on Pad mount Transformer (see notes 1, 2, 3, & 5)

Total Service Amps (Connected Load)_____Amps Total Diversified Service Amps (Diversified Load) _____Amps

Service Type:

☐ Overhead Service

☐ Underground Service

Motor Information: _____ HP _____ HP _____ HP _____ HP Total Motors Running Simultaneously_____

** Motors rated at 50 HP and larger are required to have reduced voltage soft starters. **

Comments: _____

_____

Service rated above 320 Amps (see note 2): _____Secondary Size (see note 3) _____Neutral Size (see note 3)

_____ Conduit Size (see note 3) _____ # of elbows (see notes 4 & 5)

Notes:

1) All service equipment disconnecting means shall be installed with in a distance of 8 circuit feet from service entrance.
2) All services rated above a 320 amp meter base will be required to have an outside main disconnect.
3) If the service is CT'd on pole or pad mount transformer, then customer will install secondary service wire and conduit.
4) If service is CT'd on pole, then customer will install 90 degree long sweeping elbows at pole.
5) If service is CT'd on pad mount transformer, then HILCO will install 90 degree long sweeping elbows and install pad for the transformer.
6) A transocket can be used if there will be multiple tenants or refer to spec sheet for main disconnect and multiple meter installation examples.
7) HILCO will install secondary wire and conduit for all services rated at 320 amps or less and all transocket installations.

Load data must be completed as much as possible. Any cost associated with changes, due to inadequate or inaccurate information, will be borne by the Member/Representative.

SIGNATURE: _____ **DATE:** _____

Multiple Meter Installation Example

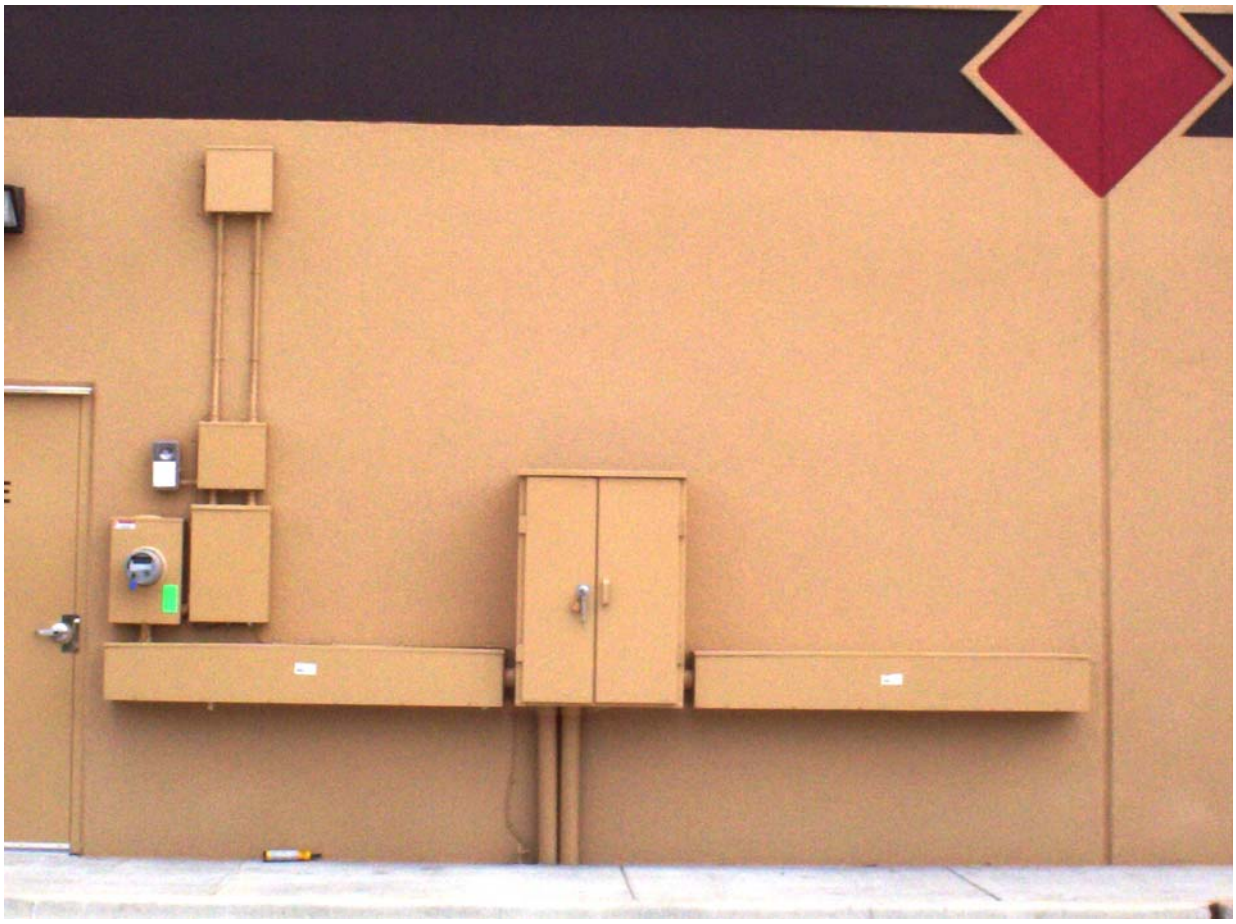

TRANSFORMER PAD DIMENSIONS

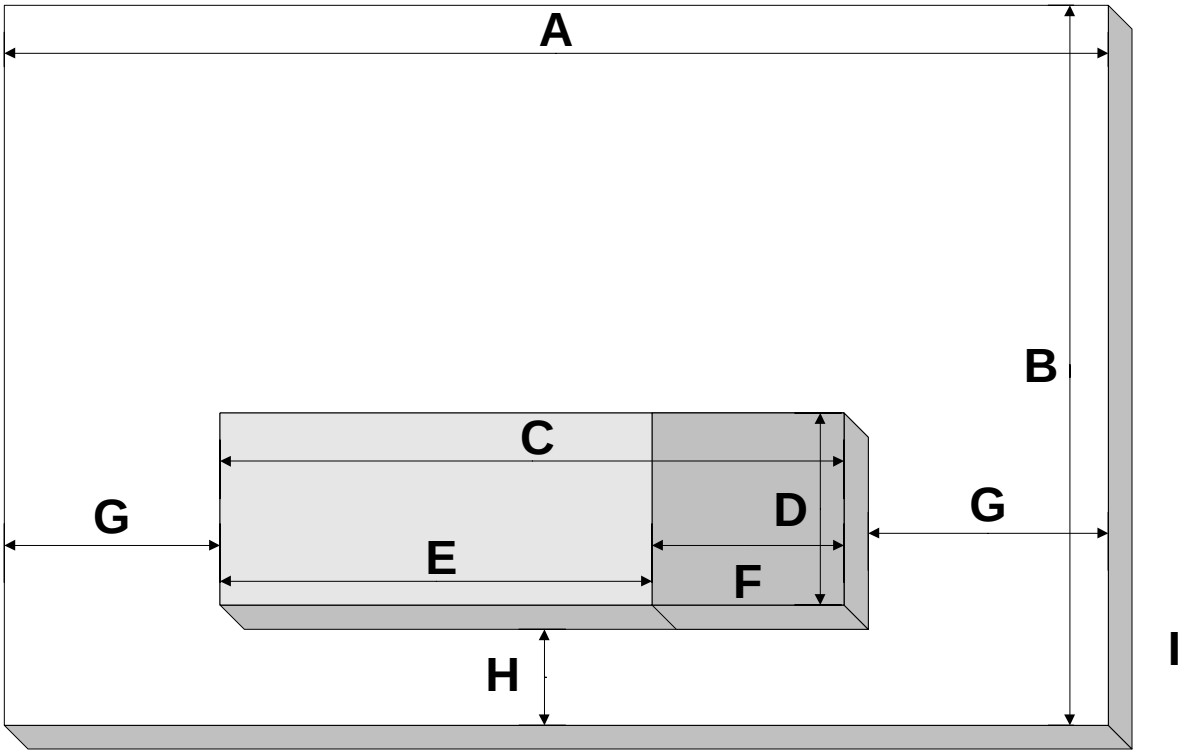

KVA	A	B	C	D	E	F	G	H	I
75	88"	70"	62"	17"	39"	23"	13"	10"	4"
112.5	88"	70"	62"	17"	39"	23"	13"	10"	4"
150	88"	70"	62"	17"	39"	23"	13"	10"	4"
300	92"	70"	66"	17"	39"	25"	13"	10"	6"
500	92"	70"	66"	17"	39"	25"	13"	10"	6"
750	92"	80"	68"	17"	40"	28"	12"	10"	8"
1000	92"	80"	68"	17"	40"	28"	12"	10"	8"
1500	99"	100"	69"	21"	40"	29"	15"	15"	10"

Account Number:

_____

HILCO Electric Cooperative, Inc.

A Texas Non-Profit, member-Owned Electric Cooperative

PERMISSION and WAIVER of LIABILITY

"Owner": means that _____, the undersigned property owner, tenant, officer of corporate property owner, official representative or officer of civic or church group, or individual, whom has authority to grant permission and release liability regarding the property, including owner's family, employees, agents, invitees, tenant's personal representatives, or assigns.

"Property": means that the property located in _____ County, Texas, Located at the address of

Address or Location:_____

"Work": means to install and/or maintain electric power to the property or adjoining property. The employees of HILCO Electric, including its contractors, must enter the property owned, or in possession of, the owner to do the following work with the following circumstances:

- HILCO Electric will not be held liable for any damage to the property.
- HILCO Electric will not be responsible to replace or repair any issues that are a result of the work. Examples being, but not limited to, the repairing of driveways, dirt work, removal of debris, repairing of ruts, replacement of grass, sod and/or vegetation, etc.
- All underground facilities will need to be exposed or located, prior to construction, where the electric work intersects them. Underground facilities include, but are not limited to, water lines, owner's electric lines, sewer and lateral lines, septic tanks, water sprinkler lines, etc.
    - **Any underground facilities not exposed or located, by the owner, could be damaged.**
    - **If the owner cannot expose or locate the underground facilities on the property, then the owner here by gives HILCO Electric, by signing below, permission to proceed by potentially damaging these facilities under these circumstances with the express understanding that any damage done to the property will be repaired at the <u>owner's expense</u>.**
- Prior to construction, the path of the electric work must be clear of any obstructions.
- All work schedules are dependent upon weather and ground conditions.
- Underground trenching spoil will be mounded over the trench when it is covered. This method is used to avoid the trench from caving in by allowing proper settling.

"Owner" and HILCO Electric Cooperative, Inc. agree as follows regarding the property stated in this form above.

Owner states that:

(1) The property is owned, or in the possession and control of the owner, who has the AUTHORITY to make this agreement:

(2) Owner has the authority to grant HILCO Electric and here by grants HILCO Electric permission to enter, or cross the property and perform the scope of work, and

(3) Owner WAIVES any right to any causes of action against HILCO Electric for direct or consequential damages to owner or owner's property that might occur during the work.

_____ _____

(Signature of property owner or legal representative) (Date)

EASEMENT INSTRUCTIONS

To help guide you through the process of completing this easement properly. Please find the attached electric easement and follow the instructions below. Blank spaces, on the easement form, are referenced in this guide by number. **Please use blue ink when completing this form.**

The Grantor(s) must fill out the entire easement form with blue ink and sign in front of a Notary Public.

Completed easements must be returned to HILCO Electric Cooperative, Inc. prior to construction. Failure to do so will delay the timely installation of your electric service.

***** HILCO Electric Cooperative, Inc. requires that a copy of the property or warranty *** deed be submitted along with this electric easement.**

Page 1 of 2

Blank #1 (Grantor) : Fill in the name of the property owner(s). All persons shown on the property deed must be listed as the Grantor(s). If the property is owned by a corporation, then the corporation's name must be inserted here and the person signing on behalf of the corporation must be an authorized representative with legal authority.

Blank #2 (Address of Property) : Use the blank area to list the address, if available.

Blank #3 (Legal Description of Property) : This information can be found on the property or warranty deed. Fill in this area with the legal description of the property as it is described. The legal description is usually the first paragraph on the deed that includes the abstract, survey, acreage, lot, block or subdivision description of the land. Simply writing "See Attached" here or adding any referenced Exhibits will not be accepted.

Blank # 4 through #10 (Filed and Stamped in the Public Records) : Blank #4 needs to be filled in with the name of the County where the property is located. Blank #5 through #10 needs to be filled in with the Deed Number, the Volume Number, the Page Number, and the Date of which the property was filed and stamped in the Public Records Department. This information can be found on the property or warranty deed and must be from the current owner(s) signing the electric easement.

Page 2 of 2

Blank #1 through #3 (Date) : Enter the date the Grantor(s) are signing this easement in the space provided.

Blank #4 through #5 (Grantor #1 Signature) : Sign and print on the indicated lines. If more than one owner is listed on the deed of the property, then multiple grantors will need to sign.

Blank #6 (County of Notary Public) : The Notary Public should legibly fill in the county where they are empowered to act.

Blank #7 through #9 (Date & Grantor Printed Name) : The Notary Public should legibly fill in all blanks. Enter date in the space provided. Print Grantor name on the indicated lines provided.

Blank #10 (Notary Public Signature) : Should be signed by the Notary Public

Blank #11 (Notary Public Expiration) : Fill in the expiration date of the Notary's commission.

Blank #13 through #21 (Grantor #2 Signature & Notary Public) : If applicable, this section is the same as above, if there is a second Grantor.

Blank #22 through #35 (For Corporations): Only authorized representatives with legal authority shall sign on the indicated lines. The Notary Public should legibly fill in the provided notary section.

Office Use Only
Account Number:
_____

HILCO ELECTRIC COOPERATIVE
UTILITY EASEMENT AND COVENANT OF ACCESS

Grantors:_____

Grantee: HILCO ELECTRIC COOPERATIVE, INC., its successors and assigns (hereinafter called the "Cooperative")

Consideration: for good and valuable consideration including the approval and execution of an Electric Service Agreement.

Property of Grantor: **Address** (if available): _____

Legal Description of Property:_____

_____

_____

as described in that document filed in the Public Records of

_____County, Texas, in Deed Number: _____Volume Number:_____

Page Number:_____on the _____day of _____, 20_____.

Easement size: The easement rights herein described shall be no broader than reasonably necessary to provide electric and other utility service. The width of the easement shall be 20 feet, 1/2 of such distance on either side of the Cooperative's lines, poles, or other facilities. The height of the easement shall be from 15 feet beneath the surface of the ground to a height of 70 feet above the ground.

The right-of-way, easement, rights and privileges herein granted shall be used:

(1) to provide electric utility service, including placing, constructing, operating, repairing, inspecting, rebuilding, replacing, removing, relocating, upgrading, maintaining overhead or underground electric distribution facilities, lines, or cables, by one or more circuits, with necessary foundations, footings, or equipment; extending lines for other service to other property and services beyond the Property; and carrying telephone or cable television wires of the Cooperative or any lessee thereof, which right will continue if the line is deactivated;

(2) prohibit the construction of any structures (except ordinary fencing) upon, over, under, or within ten lateral feet from any electric line or within such proximity to an above-ground electric facility that such construction would endanger the operation or prevent the maintenance of the line or system, except upon the prior agreement thereto by the Cooperative;

(3) install at angle points guy wires, anchors, and stub poles outside the designated right of way strip;

(4) clear that land outside the right-of-way strip within ten feet of the service door of any transformer or cabinet located within the right-of-way strip and to keep the area within ten feet of the door clear of trees, structures or other obstructions;

(5) for underground lines, to construct by digging, trenching, and by other reasonable means, maintain, operate, relocate and replace underground electric facilities, lines, conduits with other necessary apparatus and appliances, either above ground or below ground, to include transformers and service connections, for the purposes of transporting electricity and for the communications purposes of Grantee and its licensees;

(6) clear the right-of-way of all obstructions, including but not limited to mechanical or chemical means or otherwise;

(7) cut, trim and chemically control trees and shrubbery to the extent necessary to lay cables and to keep and maintain a right-of-way clear of all structures (except ordinary fences), trees, stumps, roots, shrubbery and undergrowth along said electric lines, facilities, or structures for a space of 10 feet on each side of the line;

(8) cut down all

(a) dead, weak or dangerous trees outside of the right-of-way which, in the opinion of the Cooperative representatives, constitute a hazard to or may endanger the safety and proper operation of or maintenance of said lines, facilities, or structures, a danger tree being any tree that is tall enough to strike wires in falling or trees of any species that Grantee determines will grow at maturity to a height that will endanger the property maintenance and operation of said lines, and

(b) limbs outside of the right-of-way strip which, in the opinion of the Grantee, might interfere with or fall upon the electric or communications facilities within the right-of-way strip; and to install guy wire and anchors extending beyond the right-of-way strip when determined necessary by the Grantee;

(9) jointly use or occupy the line or system with any other person, association or corporation for electrification or telephone purposes and to add cable television lines, coaxial cable, or fiber-optic transmission lines and for similar or compatible uses of existing electric line facilities and easements;

(10) read any meter or performing any act related to the provision of utility service; and

(11) use as much of the surface of the Property of Grantor that is reasonably necessary to construct and maintain the facilities within the right-of-way granted. All trees which the Cooperative is authorized to cut by this agreement shall be the property of the Cooperative.

The easement, right, and privilege herein granted shall be perpetual, appurtenant to the land, and shall inure to the benefit of the Cooperative, its successors and assigns. Grantor represents that Grantor is the owner of the above-described tract of land and binds himself/herself/itself, his/her/its heirs, successors, assigns, and legal representatives to warrant and forever defend the easement and rights described herein to the Cooperative, its successors and assigns.

Grantor further covenants that Grantor, his/her/its heirs, successors and assigns shall facilitate and assist Cooperative personnel in exercising their rights and privileges herein described at all reasonable times and shall not build, construct or cause to be erected any building or other structure that may interfere with provision of electric service or the exercise of the rights granted to the Cooperative herein.

Signed in front of a Notary Public this_____day of _____, 20_____.

_____
Grantor #1 [Signature]

_____
Grantor #1 [Print]

STATE OF TEXAS
COUNTY OF_____

This instrument was acknowledged before me on the _____day of _____, 20____ by_____ **[Grantor #1].**

_____
[Signature] Notary Public, State of Texas

My Commission Expires:
____/_____/_____

NOTARY SEAL

_____
Grantor #2 [Signature]

_____
Grantor #2 [Print]

STATE OF TEXAS
COUNTY OF_____

This instrument was acknowledged before me on the _____day of _____, 20____ by_____ **[Grantor #2].**

_____
[Signature] Notary Public, State of Texas

My Commission Expires:
____/_____/_____

NOTARY SEAL

If Corporation or Other Legal Entity:

_____
Exact Legal Name of Entity

By:_____
[Signature] Authorized Officer/Representative

_____
[Print]

_____
[Title]

STATE OF TEXAS
COUNTY OF_____

This instrument was acknowledged before me on the _____day of _____, 20____ by_____ **[Name of Officer]**, _____**[Title of Officer]** of _____**[Name of Corporation/Entity],** in _____**[State of Incorporation**], on behalf of said corporation.

_____
[Signature] Notary Public, State of Texas

My Commission Expires:
____/_____/_____

NOTARY SEAL

HILCO™
Electric Cooperative, Inc.

METER LOOP

AND

WIRING SPECIFICATIONS

Version 2026.7

HILCO ELECTRIC COOPERATIVE, INC.
METER LOOP AND WIRING SPECIFICATIONS

** The following meter loop and wiring specifications are intended for residential and ** small non-residential services. Where service requirements exceed single-phase 120/240 voltage and/or 320 amps, please contact HILCO Electric Cooperative for any adjustments and additional requirements.

****WARNING****
PLEASE CALL FOR UTILITY LOCATES BEFORE DIGGING
AT 1-800-DIGTESS or 811

HILCO Electric Cooperative shall require that the following conditions be met before electric service will be provided:

1. The consumer is responsible for installing and maintaining the electrical facilities in accordance with HILCO requirements.

2. The consumer may not contact, attach or utilize HILCO's electric distribution facilities.

3. HILCO reserves the right to approve a consumer's complete electric system and to determine that all conditions of code, safety and the design of the facilities being served have no detrimental effects upon the utility service. **Where HILCO specifications exceed code they shall take precedence.**

4. Consumers will furnish the meter base, meter loop, and service entrance facilities. Poles and/or any material used for meter loops shall be the consumer's responsibility.

5. Poles and/or <u>any material</u> used for meter loops shall be made of sound material and appropriately treated to resist degradation from the environment. HILCO will not connect service to any type of pole that has been spliced or pieced together. (Refer to the appropriate specification for installation and size requirements.)

6. Temporary meter loops are the consumer's responsibility and are meant to be temporary installations used during construction. Temporary meter loops shall be a minimum distance of ten feet (10') from HILCO's overhead facilities and shall not exceed ninety feet (90'). For underground installations, temporary poles shall not exceed ten feet (10') from HILCO's underground facilities.

7. The consumer shall install the appropriate contact apparatus to accept HILCO's electric service. All mast risers (through the roof) shall be 2" galvanized rigid metal conduit (as a minimum) and of sufficient strength to support the service drop conductors.

8. All service contacts shall not be less than thirteen (13') feet from final grade and all weather heads shall not be less than twelve and a half (12' 6") feet from final grade. **HILCO Electric enforces the National Electric Safety Code Section 23 Rule 232 and takes precedence over this rule to ensure that adequate clearances are met and maintained.**

9. HILCO **will not** attach their electric service directly to any type of portable or mobile structure.

10. HILCO **will** attach their electric service directly to a manufactured home or structure, provided that any axles and tongue/hitches be removed, it is mounted on a permanent, poured-in-place, concrete foundation and/or piers.

11. The NEC, specifically Article 250, defines various types of grounding electrodes and methods for grounding. HILCO takes precedence over NEC and requires all ground rods to be driven at least 8 feet deep into the earth and shall be located outside the foundation and structure.

12. The meter base shall be the ringless, socket type, shall be located outside of buildings, must be able to accept a padlock by HILCO, and shall be accessible to HILCO employees at all times. Meter bases must be installed between five feet (5') and six feet (6') from grade. However, a minimum height of four feet (4') is permitted for underground temporary and permanent meter poles, pedestals and H-Frame installations.

13. HILCO Electric's specifications do not allow "double lugging" or the installation of multiple conductors under one lug inside the meter base. Specific meter bases may accept multiple conductors, if it has the ability to exchange the lugs to accommodate and also if space permits within the meter base.

14. Service equipment disconnecting means or a main breaker shall be provided and installed by the consumer. Its purpose shall be to provide a means of disconnecting all conductors in a building or other structure from the service-entrance conductors.

    A. **Residential Installations** (NEC 230.85) For all one and two-family dwelling units, HILCO requires a clearly labeled Emergency Disconnect to be installed in a readily accessible **outdoor** location. This device must meet the requirements of NEC 230.85 to allow first responders to safely de-energize the property from the exterior.
    - The disconnect must be installed on the exterior of the dwelling or within sight of the meter base.
    - The enclosure must be marked with a permanent plaque as either "EMERGENCY DISCONNECT, SERVICE DISCONNECT".

B. **Other Installations** (NEC 230.70) For all non-residential installations (commercial, industrial, or agricultural), the location of the service disconnecting means shall be "readily accessible" per NEC 230.70. HILCO, as the electric provider, maintains the authority to enforce the specific placement of this equipment.

- HILCO states that all service equipment disconnecting means for these installations shall be installed within a distance of eight (8) circuit feet from the point of service entrance.
- If the distance of eight (8) circuit feet cannot be met, an outside main disconnect must be installed, or an alternative readily accessible location must be approved by HILCO engineering prior to installation.

15. Wire size shall be based according to load, amp rating of the main disconnect and rating of the meter base. To ensure proper coordination, the amp rating of wire should be equal to or greater than the main disconnect and the main disconnect shall not exceed the amp rating of the meter base.

A. The main disconnect shall have a rating not less than the calculated load to be carried.

B. Every service shall have a main disconnect. The NEC Article 230.71, changed in 2020, **no longer allows** a maximum of six breakers to be grouped in the place of a main disconnect.

16. Where service is supplied by more than one electric service to a single structure, a permanent plaque must be installed containing information describing all other electric services, their location and the area they serve.

17. The meter loop will consist of three INSULATED COPPER or ALUMINUM wires,100-amp capacity as a minimum for residential service and 60-amp capacity as a minimum for non-residential service. The neutral, as a minimum, cannot be smaller than two sizes below the conductor size. Allowable ampacities for residential dwellings and other non-residential applications.

18. NEC Code gives note, in Article 310.12, that residential dwellings shall have a minimum 100 amp and all other non-residential, in Article 230.79 (D), shall have a minimum 60 amp, utilizing the below wire ampacity tables:

	Residential	***Non-Residential***
Copper Wire (THW) Size and Ampacity	**NEC Table 310.12** **Residential Service Entrance**	**NEC Table 310.16** **Non-Residential Service Entrance**
# 6	-	65 amps
# 4	100 amps	85 amps
# 3	110 amps	100 amps
# 2	125 amps	115 amps
# 1	150 amps	130 amps
# 1/0	175 amps	150 amps
# 2/0	200 amps	175 amps
# 3/0	225 amps	200 amps
# 4/0	250 amps	230 amps
# 250	300 amps	255 amps
# 300	-	285 amps
# 350	350 amps	310 amps
# 400	400 amps	335 amps

	Residential	***Non-Residential***
Aluminum or Copper-Clad Aluminum Wire (THW) Size and Ampacity	**NEC Table 310.12** **Residential Service Entrance**	**NEC Table 310.16** **Non-Residential Service Entrance**
# 4	-	65 amps
# 3	-	75 amps
# 2	100 amps	90 amps
# 1	110 amps	100 amps
# 1/0	125 amps	120 amps
# 2/0	150 amps	135 amps
# 3/0	175 amps	155 amps
# 4/0	200 amps	180 amps
# 250	225 amps	205 amps
# 300	250 amps	230 amps
# 350	300 amps	250 amps
# 500	350 amps	270 amps
# 600	400 amps	310 amps

HILCO ELECTRIC COOPERATIVE, INC.
TEMPORARY METER INSTALLATION-OVERHEAD SERVICE

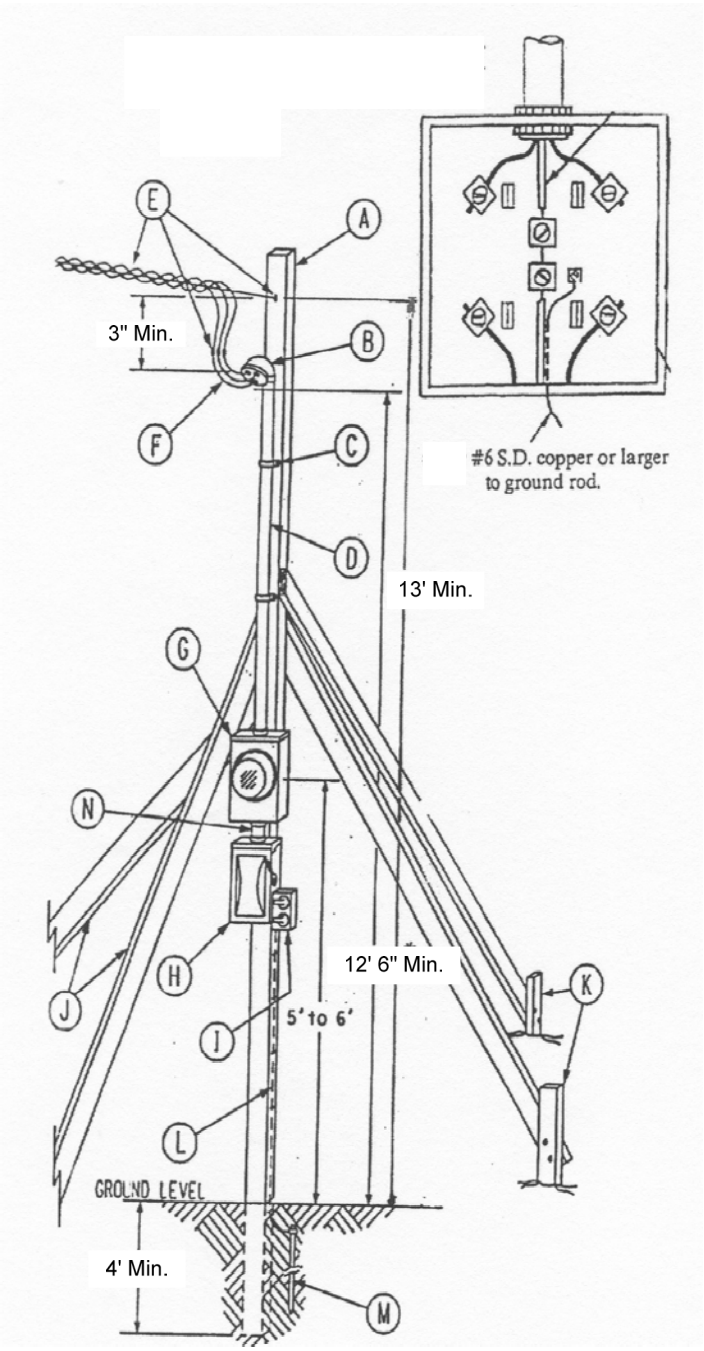

**** Minimum 10' and Maximum 90' from ** HILCO's Facilities**

NOTE: CUSTOMER SHALL INSTALL AND MAINTAIN THIS FACILITY IN A SAFE CONDITION. IT CAN BE LEFT INTACT AND MOVED FROM JOB SITE TO JOB SITE. IT SHALL NOT BE MOVED WHILE ENERGIZED. INTENDED FOR TEMPORARY USE ONLY.

A - 4" X 4" X 17' WOODEN MAST MINIMUM.

B - DO NOT EXTEND WEATHERHEAD ABOVE TOP OF POLE. MUST BE MINIMUM 3" BELOW TOP OF POLE. (MINIMUM HEIGHT OF 12' 6"' FROM FINAL GRADE)

C – METAL 2-HOLE CONDUIT STRAP SEPARATION SHALL BE NO GREATER THAN 30" WITH A MINIMUM OF 2 CONDUIT STRAPS.

D - SERVICE RISER SHALL BE FURNISHED AND INSTALLED BY CONSUMER. RISER SHALL BE GALVANIZED RIGID STEEL, I.M.C. OR SCH 80 ELECTRICAL PVC. (1¼ " MIN)

E – SERVICE DROP CONDUCTORS, SERVICE ATTACHMENTS, AND CONNECTORS FURNISHED AND INSTALLED BY HILCO. (MINIMUM HEIGHT OF 13' FROM FINAL GRADE)

F - A MINIMUM OF 2' OF CONDUCTOR SHALL EXTEND FROM WEATHERHEAD TO FORM DRIP LOOP. CONSUMER SHALL MARK NEUTRAL WITH WHITE TAPE.

G - METER BASE FURNISHED, INSTALLED, AND WIRED BY CONSUMER. (MINIMUM 5' TO MAX 6' FROM GRADE) **SHALL NOT BE USED AS RACEWAY**

H – WEATHERPROOF BOX, WITH MAIN DISCONNECT. FURNISHED AND INSTALLED BY CONSUMER. (AMP RATING SHALL BE CONSISTENT WITH SERVICE CONDUCTOR AMPACITY)

I - ANY WEATHERPROOF RECEPTACLES SHALL HAVE GROUND FAULT PROTECTION.

J - 2" X 4" BRACES ATTACHED WITH LUG SCREWS OR 16 PENNY NAILS AT 90 FROM EACH OTHER. (FACED TOWARDS HILCO'S FACILITY)

K - 2" X 4" STAKES.

L - COPPER GROUNDING ELECTRODE CONDUCTOR SIZED AND INSTALLED BY CONSUMER ACCORDING TO HILCO REQUIREMENTS. (#6 SOFT DRAWN BARE OR STRANDED COPPER MINIMUM.)

M - APPROVED GROUNDING ELECTRODE AND CLAMP, FURNISHED AND INSTALLED BY CONSUMER. (GROUND ROD SHALL BE 5/8" X 8' COPPER OR GALVANIZED.)

N - NIPPLE RACEWAY TO METER SOCKET SHALL BE RIGID METAL, I.M.C. OR SCH 80 ELECTRICAL PVC.

HILCO ELECTRIC COOPERATIVE, INC.
PERMANENT METER POLE

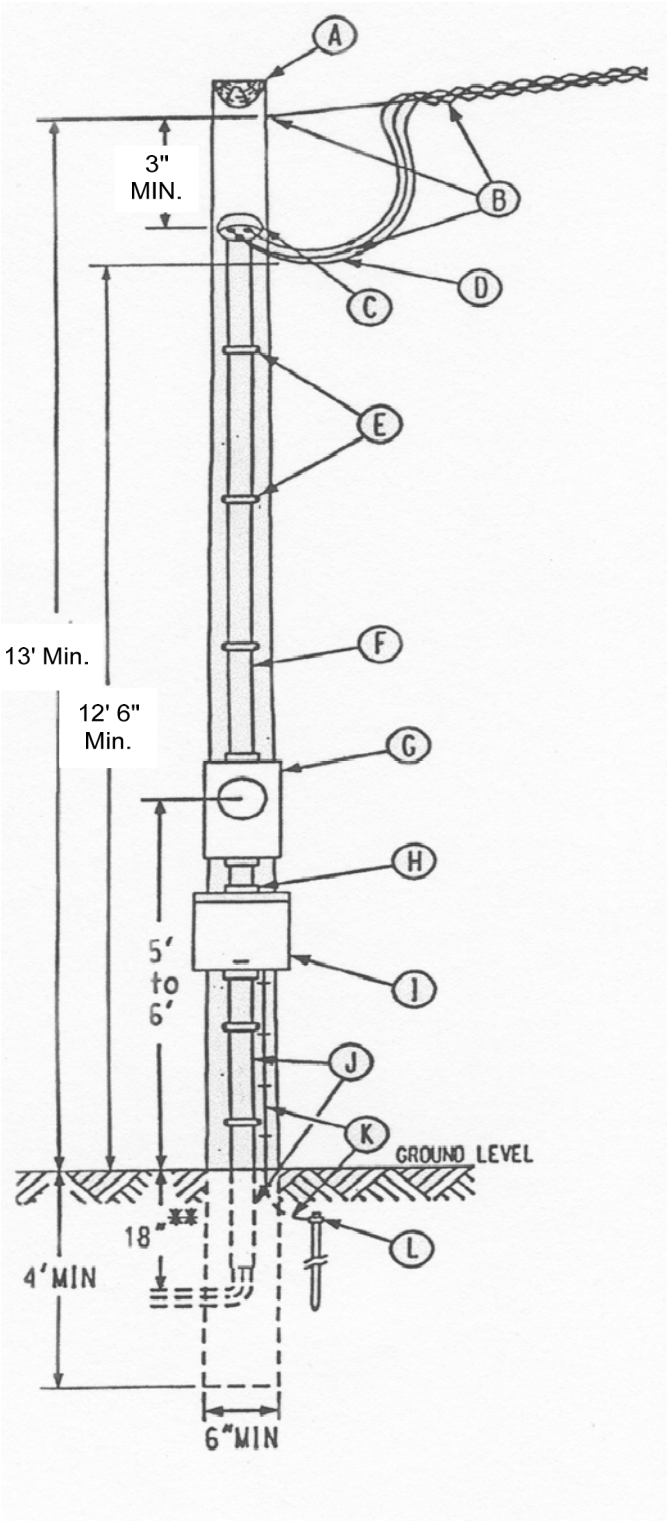

**** Minimum 10' and Maximum 75' from ** HILCO's Facilities**

A – METER POLE INSTALLED BY CONSUMER. (POLE SHALL BE 6" X 6" X 17' MINIMUM)

B - SERVICE DROP CONDUCTORS. SERVICE ATTACHMENTS, AND CONNECTORS FURNISHED AND INSTALLED BY HILCO. (MINIMUM HEIGHT OF 13' FROM FINAL GRADE)

C - DO NOT EXTEND WEATHERHEAD ABOVE TOP OF POLE. MUST BE A MINIMUM 3" BELOW TOP OF POLE. (MINIMUM HEIGHT OF 12' 6" FROM FINAL GRADE)

D - A MINIMUM OF 2' OF CONDUCTOR SHALL EXTEND FROM WEATHERHEAD TO FORM DRIP LOOP. CONSUMER SHALL MARK NEUTRAL WITH WHITE TAPE.

E – METAL 2-HOLE CONDUIT STRAP SEPARATION SHALL BE NO GREATER THAN 30" WITH A MINIMUM OF 2 CONDUIT STRAPS.

F - SERVICE RISER WITH WEATHERHEAD, FURNISHED AND INSTALLED BY CONSUMER. SHALL BE GALVANIZED RIGID STEEL, I.M.C. OR SCH 80 ELECTRICAL PVC (1 ¼ " MINIMUM).

G - METER BASE FURNISHED, INSTALLED, AND WIRED BY CONSUMER. (MINIMUM 5' TO MAX 6' FROM GRADE) **SHALL NOT BE USED AS RACEWAY**

H - ALL CONDUIT NIPPLE RACEWAYS SHALL BE RIGID METAL, I.M.C. OR SCH 80 ELECTRICAL PVC.

I - WEATHERPROOF BOX, WITH MAIN DISCONNECT. FURNISHED AND INSTALLED BY CONSUMER. (AMP RATING SHALL BE CONSISTENT WITH SERVICE CONDUCTOR AMPACITY.)

J - SERVICE RACEWAY SHALL BE GALVANIZED RIGID STEEL CONDUIT, I.M.C. OR SCH 80 ELECTRICAL PVC. FURNISHED AND INSTALLED BY CONSUMER TO A MINIMUM DEPTH OF 18 INCHES BELOW GROUND LEVEL.

K - COPPER GROUNDING ELECTRODE CONDUCTOR FURNISHED AND INSTALLED BY CONSUMER. (#6 -SOFT DRAWN BARE OR STRANDED COPPER MINIMUM.

L - APPROVED GROUNDING ELECTRODE AND CLAMP, FURNISHED AND INSTALLED BY CONSUMER. (GROUNDING ROD SHALL BE 5/8" X 8' COPPER OR GALVANIZED.

HILCO ELECTRIC COOPERATIVE, INC.
OVERHEAD HOUSE METER SERVICE (UNDER EAVES)

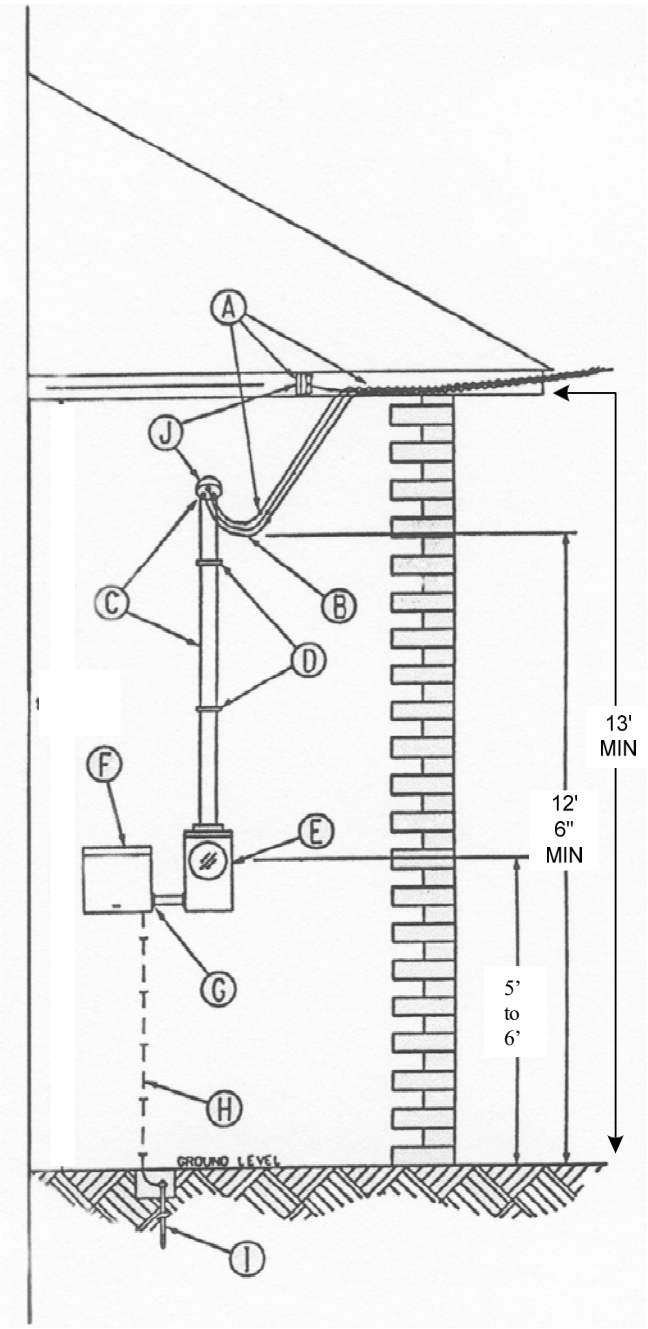

A - SERVICE DROP CONDUCTORS, SERVICE ATTACHMENT, AND CONNECTORS FURNISHED AND INSTALLED BY HILCO.
(MINIMUM HEIGHT OF 13' FROM FINAL GRADE)

B - A MINIMUM OF 2' OF CONDUCTOR SHALL EXTEND FROM WEATHERHEAD TO FORM DRIP LOOP. CONSUMER SHALL MARK NEUTRAL WITH WHITE TAPE.

C - SERVICE RISER WITH WEATHERHEAD, FURNISHED AND INSTALLED BY CONSUMER, SHALL BE GALVANIZED RIGID STEEL, I.M.C. OR SCH 80 ELECTRICAL PVC. (1 ¼ " MINIMUM)
(MINIMUM HEIGHT OF 12' 6" FROM FINAL GRADE)

D – METAL 2-HOLE CONDUIT STRAP SEPARATION SHALL BE NO GREATER THAN 30" WITH A MINIMUM OF 2 CONDUIT STRAPS.

E - METER BASE FURNISHED, INSTALLED, AND WIRED BY CONSUMER. **SHALL NOT BE USED AS RACEWAY**

F - WEATHERPROOF BOX, WITH MAIN DISCONNECT. FURNISHED AND INSTALLED BY CONSUMER. THE ENCLOSURE SHALL BE WITHIN 8 CIRCUIT FEET OF THE METER (AMP RATING SHALL BE CONSISTANT WITH SERVICE CONDUCTOR AMPACITY)

G - ALL CONDUIT NIPPLE RACEWAYS SHALL BE RIGID METAL, I.M.C. OR SCH 80 ELECTRICAL PVC.

H - COPPER GROUNDING ELECTRODE CONDUCTOR FURNISHED AND INSTALLED BY CONSUMER. (#6 SOFT DRAWN BARE OR STRANDED COPPER MINIMUM)

I - APPROVED GROUNDING ELECTRODE AND CLAMP, FURNISHED AND INSTALLED OUTSIDE THE STRUCTURE BY THE CONSUMER. (GROUND SHALL BE 5/8"X8' COPPER OR GALVANIZED.)

J – WEATHERHEAD SHALL BE WITHIN 24" OF POINT OF ATTACHMENT.

HILCO ELECTRIC COOPERATIVE, INC.
OVERHEAD HOUSE METER SERVICE (ABOVE ROOF)

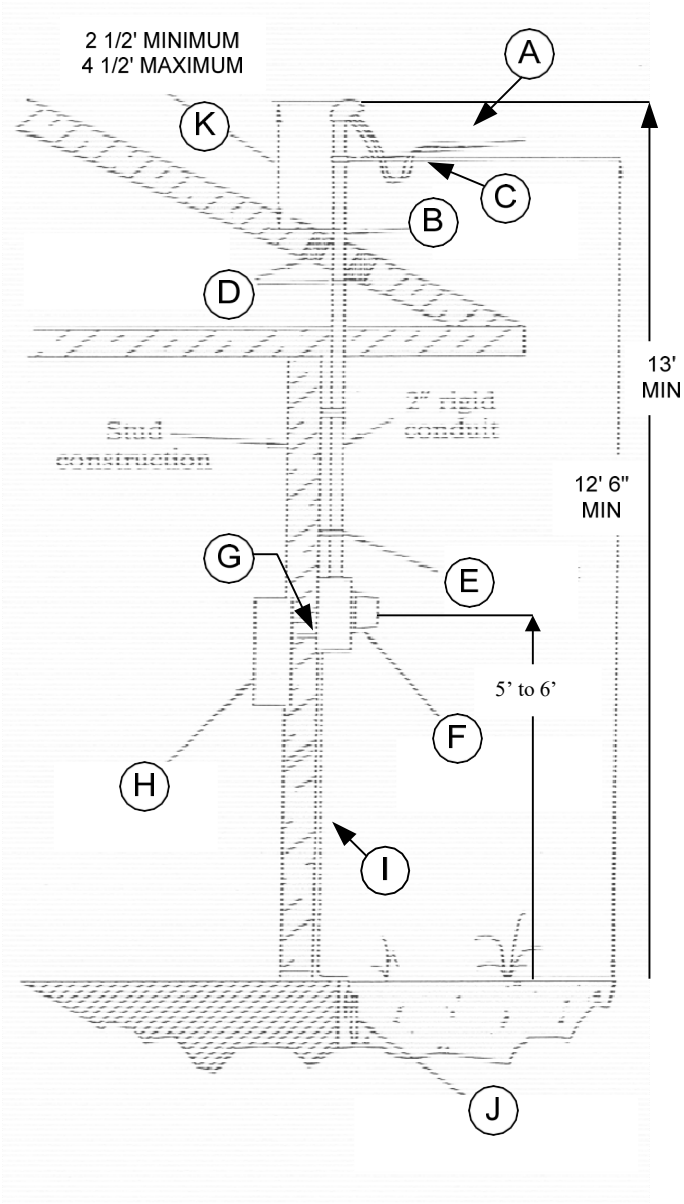

**** Recommended, any through the ** roof installation needs anchor supports for riser and service conductors.**

A - SERVICE DROP CONDUCTORS, SERVICE ATTACHMENT, AND CONNECTORS FURNISHED AND INSTALLED BY HILCO.
(MINIMUM HEIGHT OF 12' 6" FROM FINAL GRADE)

B - GALVANIZED RIGID 2" CONDUIT AS A MINIMUM WITH WEATHERHEAD FURNISHED AND INSTALLED BY CONSUMER. ENTIRE RISER SHALL BE VISIBLE.

C - A MINIMUM OF 2' OF CONDUCTOR SHALL EXTEND FROM WEATHERHEAD TO FORM DRIP LOOP. CONSUMER SHALL MARK NEUTRAL WITH WHITE TAPE.

D - USE 2" X 4" BRACING BETWEEN RAFTERS, AS A MINIMUM, TO SUPPORT SERVICE RACEWAY.

E - SERVICE MAST TO BE SUPPORTED WITH METAL 2-HOLE CONDUIT STRAPS AT 3O" SEPARATION MAXIMUM.

F - METER BASE FURNISHED, INSTALLED, AND WIRED BY CONSUMER. **SHALL NOT BE USED AS RACEWAY**

G - ALL CONDUIT NIPPLE RACEWAYS SHALL BE RIGID METAL, I.M.C. OR SCH 80 ELECTRICAL PVC.

H - BREAKER BOX, WITH MAIN DISCONNECT. FURNISHED AND INSTALLED BY CONSUMER. THE ENCLOSURE SHALL BE WITHIN 8 CIRCUIT FEET OF THE METER. (AMP RATING SHALL BE CONSISTENT WITH SERVICE CONDUCTOR AMPACITY)

I - COPPER GROUNDING ELECTRODE CONDUCTOR FURNISHED AND INSTALLED BY CONSUMER. (#6 - SOFT DRAWN BARE OR STRANDED COPPER MINIMUM

J - APPROVED GROUNDING ELECTRODE AND CLAMP FURNISHED AND INSTALLED OUTSIDE THE STRUCTURE BY THE CONSUMER.
(GROUND ROD SHALL BE 5/8" X 8'. COPPER OR GALVANIZED.)

K – CLEARANCE OF SERVICE CONDUCTOR ABOVE ROOF, SHALL BE A MINIMUM HEIGHT OF 18" AND A DISTANCE OF 4' FROM WITHIN THE EDGE OF THE ROOF. IF DISTANCE IS FURTHER THAN 4' FROM EDGE, THEN CLEARANCE HEIGHT OVER ROOF SHALL BE INCREASED TO 3' MINIMUM. (MINIMUM HEIGHT OF 13' FROM FINAL GRADE)

HILCO ELECTRIC COOPERATIVE, INC.
OVERHEAD HOUSE METER SERVICE (METAL STRUCTURE)

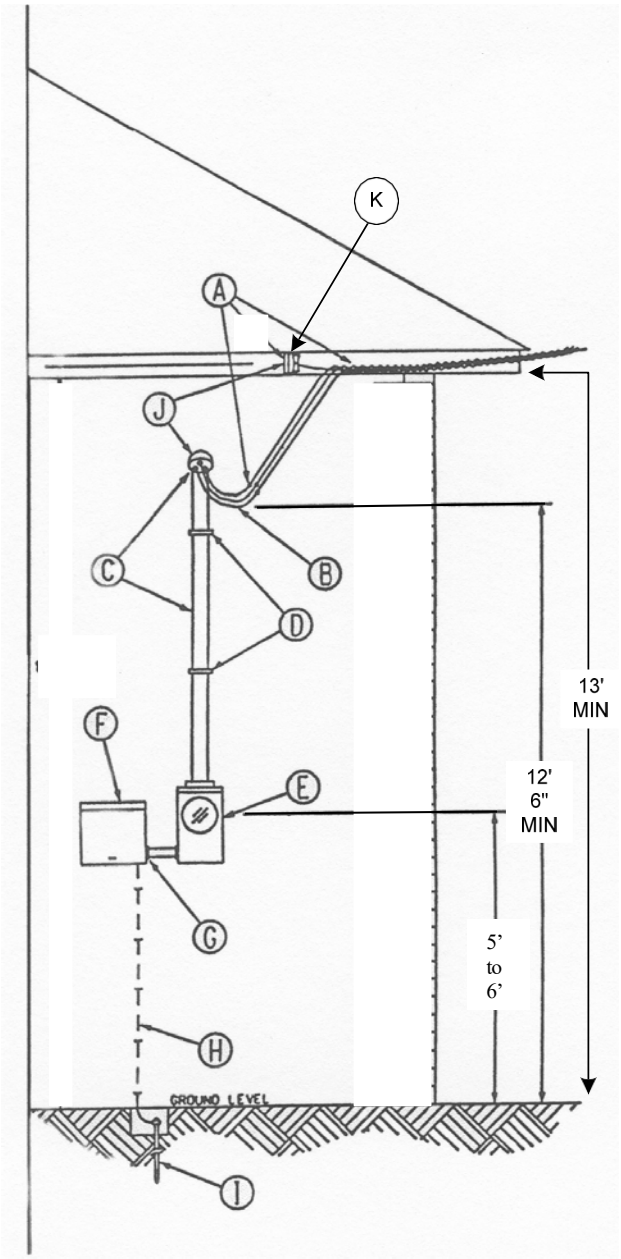

A - SERVICE DROP CONDUCTORS AND CONNECTORS FURNISHED AND INSTALLED BY HILCO. (CONSUMER WILL NEED TO INSTALL EYE BOLT FOR HILCO'S WIRE ATTACHMENT) (MINIMUM HEIGHT OF 13' FROM FINAL GRADE)

B - A MINIMUM OF 2' OF CONDUCTOR SHALL EXTEND FROM WEATHERHEAD TO FORM DRIP LOOP. CCONSUMER SHALL MARK NEUTRAL WITH WHITE TAPE.

C - SERVICE RISER WITH WEATHERHEAD, FURNISHED AND INSTALLED BY CONSUMER, SHALL BE GALVANIZED RIGID STEEL, I.M.C. OR SCH 80 ELECTRICAL PVC. (1 ¼" MINIMUM) (MINIMUM HEIGHT OF 12' 6" FROM FINAL GRADE)

D – METAL 2-HOLE CONDUIT STRAP SEPARATION SHALL BE NO GREATER THAN 30" WITH A MINIMUM OF 2 CONDUIT STRAPS.

E - METER BASE FURNISHED, INSTALLED, AND WIRED BY CONSUMER. **SHALL NOT BE USED AS RACEWAY**

F - WEATHERPROOF BOX, WITH MAIN DISCONNECT. FURNISHED AND INSTALLED BY CONSUMER. THE ENCLOSURE SHALL BE WITHIN 8 CIRCUIT FEET OF THE METER. (AMP RATING SHALL BE CONSISTENT WITH SERVICE CONDUCTOR AMPACITY)

G - ALL CONDUIT NIPPLE RACEWAYS SHALL BE RIGID METAL, I.M.C. OR SCH 80 ELECTRICAL PVC.

H - COPPER GROUNDING ELECTRODE CONDUCTOR FURNISHED AND INSTALLED BY CONSUMER. (#6 -SOFT DRAWN BARE OR STRANDED COPPER MINIMUM)

I - APPROVED GROUNDING ELECTRODE AND CLAMP, FURNISHED AND INSTALLED OUTSIDE THE STRUCTURE BY THE CONSUMER. (GROUND ROD SHALL BE 5/8" X 8' COPPER OR GALVANIZED.)

J – WEATHERHEAD SHALL BE WITHIN 24" OF POINT OF ATTACHMENT.

K – EYE BOLT FURNISHED AND INSTALLED BY CUSTOMER TO SUPPORT HILCO'S SERVICE WIRE.

HILCO ELECTRIC COOPERATIVE, INC.
TEMPORARY METER INSTALLATION-UNDERGROUND SERVICE

*** WARNING *** PLEASE CALL FOR UTILITY LOCATES BEFORE *** WARNING ***
DIGGING NEAR UNDERGROUND ELECTRIC FACILITIES
1 – 800 - DIGTESS

**** Service address must be marked on pole ****
**** Maximum 10' from HILCO's Facilities ****

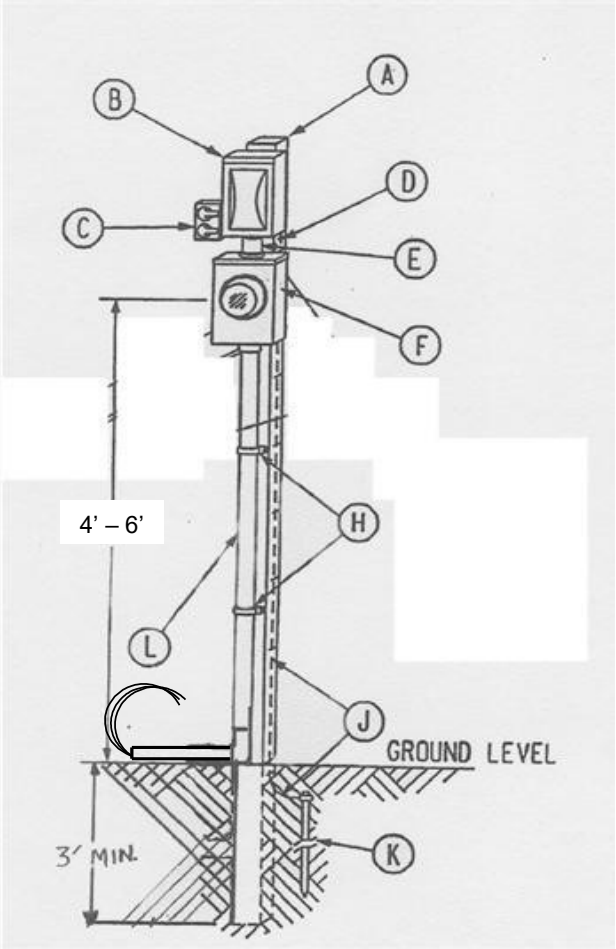

WIRING DIAGRAM OF INSIDE UNDERGROUND TEMPORARY POLE METER BASE

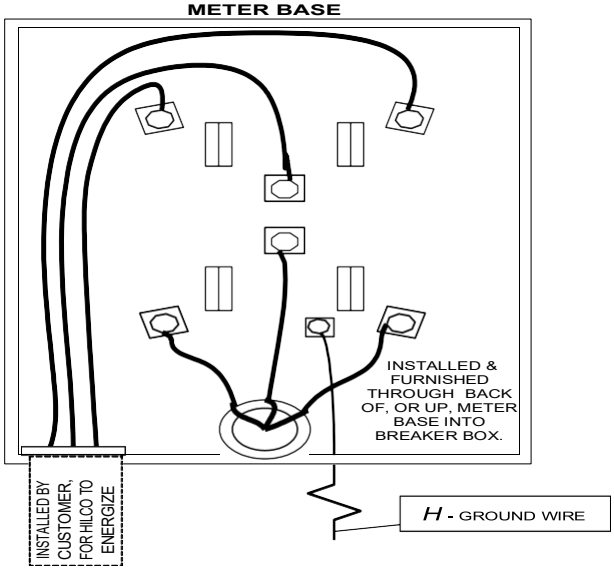

NOTE: CUSTOMER SHALL INSTALL AND MAINTAIN THIS FACILITY IN A SAFE CONDITION. IT CAN BE LEFT INTACT AND MOVED FROM JOB SITE TO JOB SITE. IT SHALL NOT BE MOVED WHILE ENERGIZED. INTENDED FOR
TEMPORARY USE ONLY.

A - 4" X 4" X 10' WOODEN MAST MINIMUM

B - WEATHERPROOF BOX WITH MAIN DISCONNECT. FURNISHED AND INSTALLED BY CUSTOMER. (AMP RATING SHALL BE CONSISTENT WITH SERVICE CONDUCTOR AMPACITY)

C - ANY WEATHERPROOF RECEPTACLES SHALL HAVE GROUND FAULT PROTECTION.

D - GROUNDING ELECTRODE CONDUCTOR ENTERS AND IS CONNECTED TO BREAKER EQUIPMENT.

E - NIPPLE RACEWAY TO METER SOCKET SHALL BE RIGID METAL, I.M.C., OR SCH 80 ELECTRICAL PVC.

F - METER BASE FURNISHED, INSTALLED, AND WIRED BY CONSUMER. (MINIMUM 4' TO MAX 6' FROM GRADE) **SHALL NOT BE USED AS RACEWAY**

H – METAL 2-HOLE CONDUIT STRAP SEPARATION SHALL BE NO GREATER THAN 30" WITH A MINIMUM OF 2 CONDUIT STRAPS.

J - COPPER GROUNDING ELECTRODE CONDUCTOR SIZED AND INSTALLED BY CONSUMER. ACCORDING TO HILCO REQUIREMENTS. (#6 SOFT DRAWN BARE OR STRANDED COPPER MINIMUM.)

K - APPROVED GROUNDING ELECTRODE AND CLAMP, FURNISHED AND INSTALLED BY CUSTOMER. (GROUNDING ROD SHALL BE 5/8" X 8' COPPER OR GALVANIZED.)

L – MINIMUM 1¼" SERVICE RACEWAY CONSTRUCTED OUT OF FLEX CONDUIT. CONDUIT AND WIRE SHALL HAVE A MINIMUM 15' OF EXTENSION, FROM THE BASE OF THE TEMPORARY POLE. THIS WILL BECOME THE "PIG TAIL" FOR HILCO TO ENERGIZE. (FURNISHED BY CONSUMER.)

HILCO ELECTRIC COOPERATIVE, INC.
UNDERGROUND HOUSE METER SERVICE

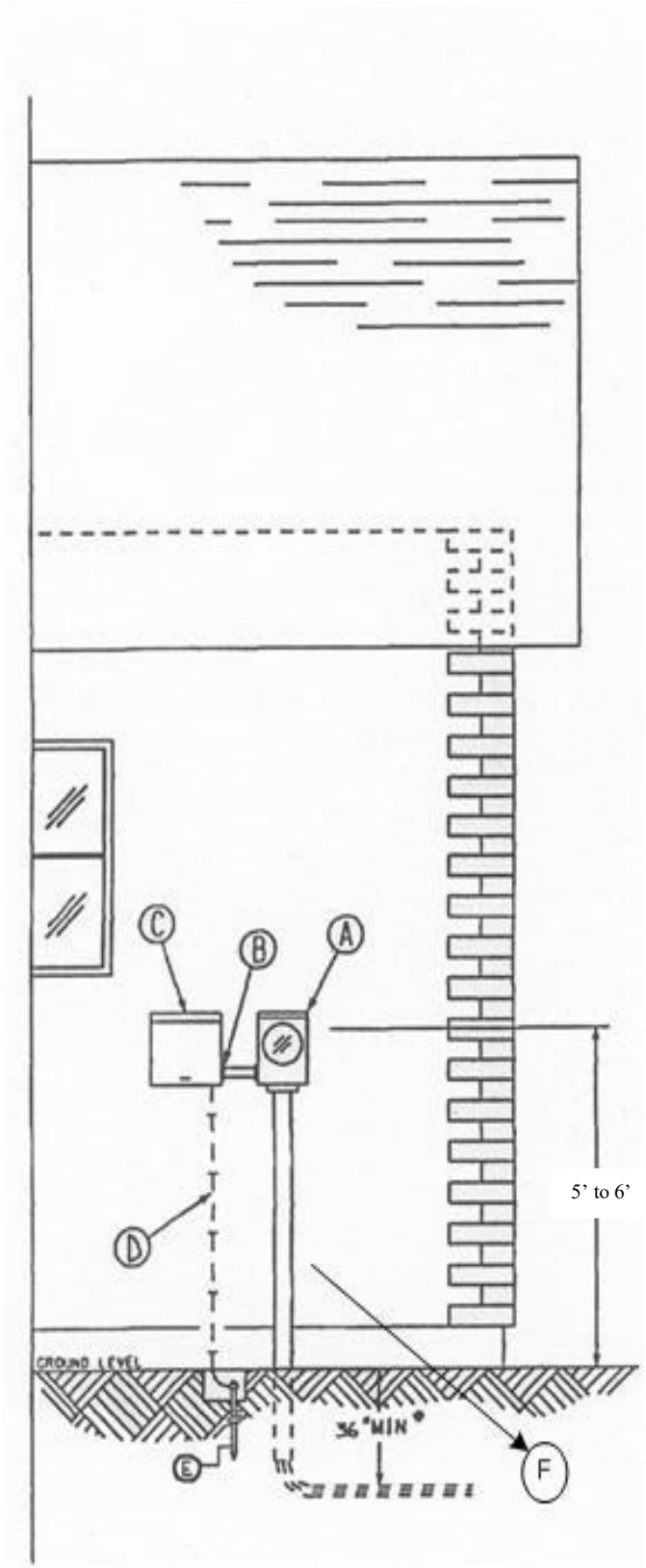

A - METER BASE FURNISHED, INSTALLED AND WIRED BY CONSUMER. **SHALL NOT BE USED AS RACEWAY**

B - ALL CONDUIT NIPPLE RACEWAYS SHALL BE RIGID METAL, I.M.C. OR SCH 80 ELECTRICAL PVC.

C - WEATHERPROOF BOX, WITH MAIN DISCONNECT. FURNISHED AND INSTALLED BY! CONSUMER. THE ENCLOSURE SHALL BE WITHIN 8 CIRCUIT FEET OF THE METER (AMP RATING SHALL BE CONSISTENT WITH SERVICE CONDUCTOR AMPACITY)

D - COPPER GROUNDING ELECTRODE CONDUCTOR SIZED AND INSTALLED BY CONSUMER ACCORDING TO HILCO REQUIREMENTS. (#6 SOFT DRAWN BARE OR STRANDED COPPER MINIMUM.)

E - APPROVED GROUNDING ELECTRODE AND CLAMP, FURNISHED AND INSTALLED OUTSIDE THE STRUCTURE BY THE CONSUMER. (GROUND ROD SHALL BE 5/8" X 8' COPPER OR GALVANIZED.)

F – CONDUIT, WIRE, AND TRENCH INSTALLED BY HILCO ELECTRIC. CONDUIT RISER SHALL HAVE NO OBSTRUCTIONS OR BENDS GOING INTO THE METER BASE. ENTIRE CONDUIT RISER SHALL BE VISIBLE AND REMAIN ON THE OUTSIDE OF THE STRUCTURE.

WIRING DIAGRAM OF INSIDE UNDERGROUND METER BASE

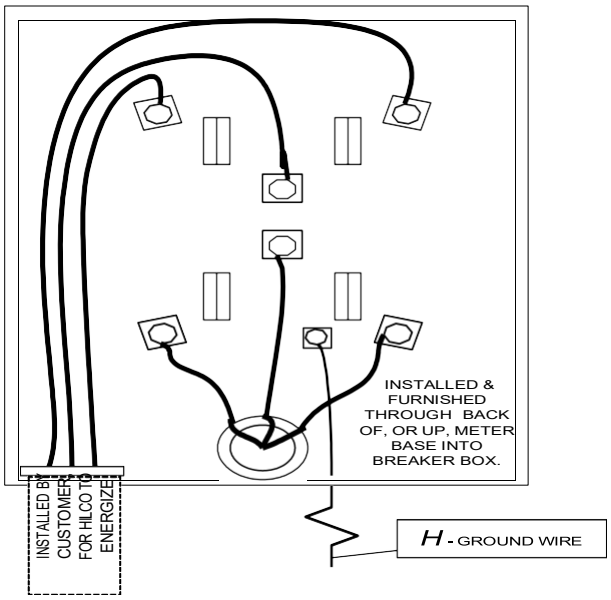

HILCO ELECTRIC COOPERATIVE, INC.
PERMANENT UNDERGROUND METER POLE (OPTION #1)

WIRING DIAGRAM OF INSIDE UNDERGROUND METER BASE

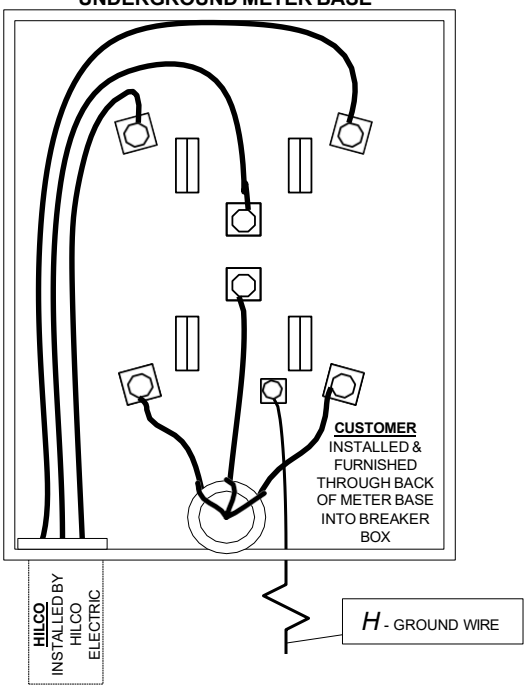

***** WARNING *** PLEASE CALL FOR UTILITY LOCATES BEFORE *** WARNING *****

DIGGING NEAR UNDERGROUND ELECTRIC FACILITIES

1 - 800 - DIGTESS

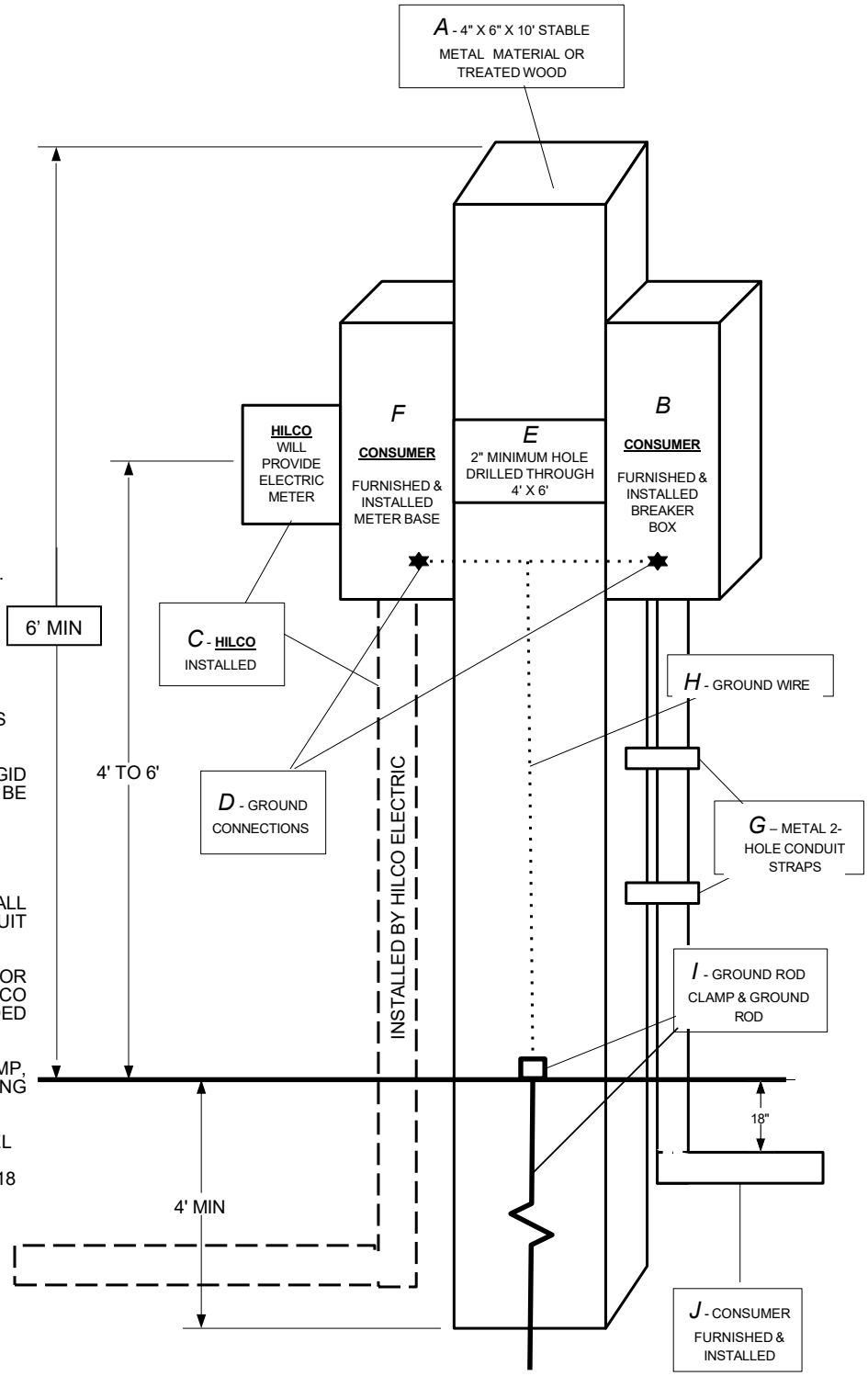

A - 4" X 6" X 10' MAST MINIMUM MADE OF STABLE METAL MATERIAL OR TREATED WOOD.

B - WEATHERPROOF BOX, WITH MAIN DISCONNECT. FURNISHED AND INSTALLED BY CONSUMER. (AMP RATING SHALL BE CONSISTENT WITH SERVICE CONDUCTOR AMPACITY)

C - ELECTRIC METER, CONDUIT, WIRE, AND TRENCH INSTALLED BY HILCO ELECTRIC.

D - GROUNDING ELECTRODE CONDUCTOR ENTERS AND IS CONNECTED TO EQUIPMENT.

E - NIPPLE RACEWAY TO METER SOCKET SHALL BE RIGID METAL, I.M.C. OR SCH 80 ELECTRICAL PVC AND SHALL BE INSTALLED THROUGH 4" X 6".

F - METER BASE FURNISHED, INSTALLED, AND WIRED BY CONSUMER. SHALL NOT BE USED AS RACEWAY

G – METAL 2-HOLE CONDUIT STRAP SEPARATION SHALL BE NO GREATER THAN 30" WITH A MINIMUM OF 2 CONDUIT STRAPS.

H - COPPER GROUNDING ELECTRODE CONDUCTOR SIZED AND INSTALLED BY CONSUMER ACCORDING TO HILCO REQUIREMENTS. (#6 SOFT DRAWN BARE OR STRANDED COPPER MINIMUM.)

I - APPROVED GROUNDING ELECTRODE AND CLAMP, FURNISHED AND INSTALLED BY CONSUMER. (GROUNDING ROD SHALL BE 5/8" X 8' COPPER OR GALVANIZED.)

J - SERVICE RACEWAY SHALL BE GALVANIZED RIGID STEEL CONDUIT, I.M.C. OR SCH 80 ELECTRICAL PVC. FURNISHED AND INSTALLED BY CONSUMER TO A MINIMUM DEPTH OF 18 INCHES BELOW GROUND LEVEL.

HILCO ELECTRIC COOPERATIVE, INC.
PERMANENT UNDERGROUND METER POLE (OPTION #2)

WIRING DIAGRAM OF INSIDE UNDERGROUND METER BASE

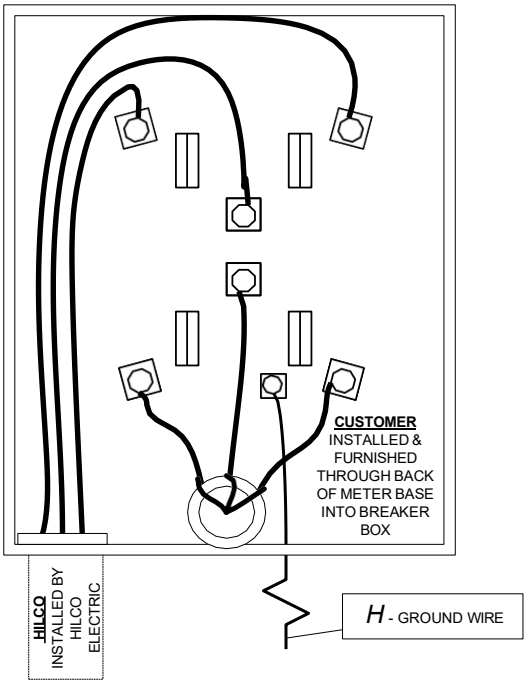

***** WARNING *** PLEASE CALL FOR UTILITY LOCATES BEFORE *** WARNING *****

DIGGING NEAR UNDERGROUND ELECTRIC FACILITIES

1 - 800 - DIGTESS

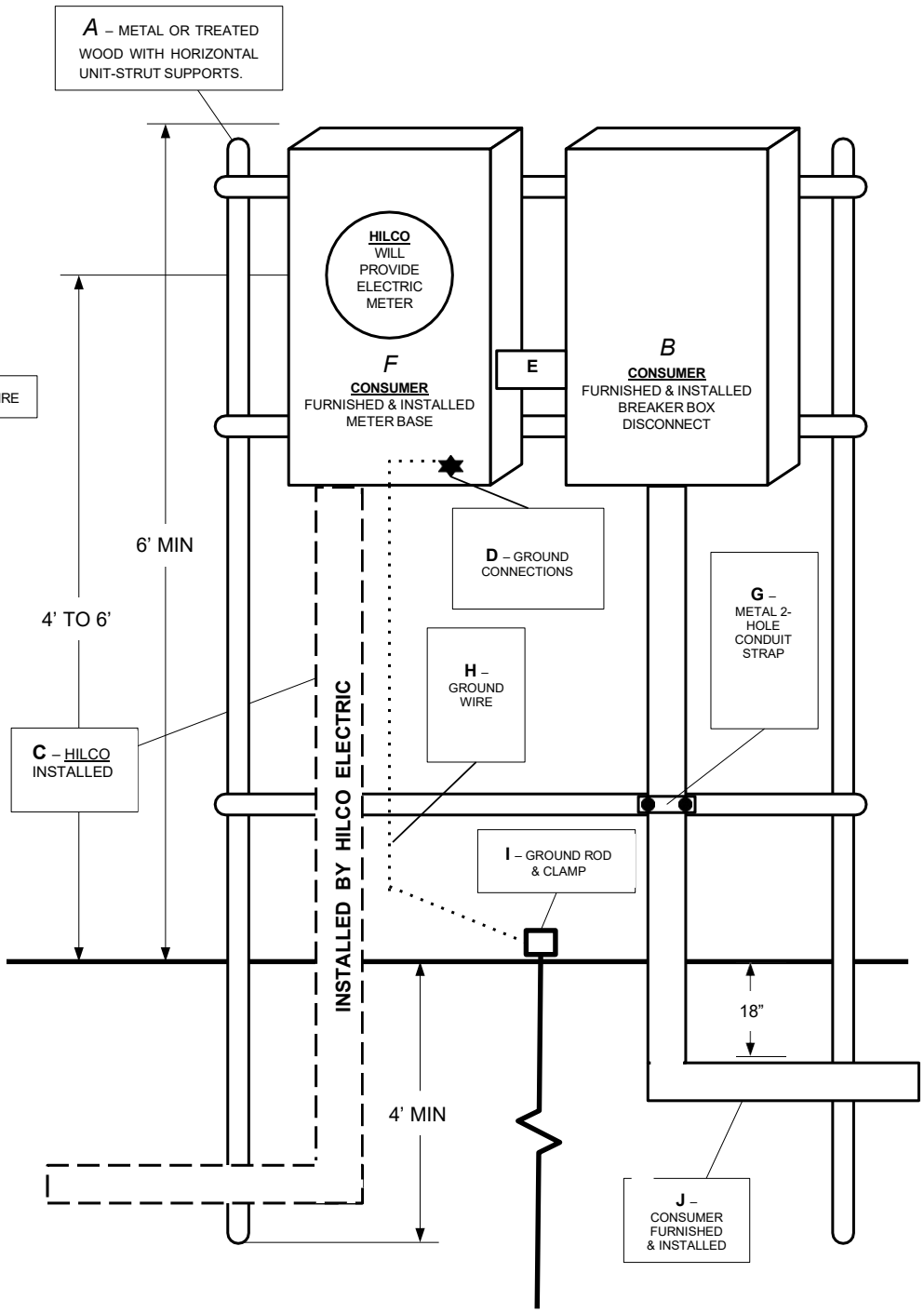

A - VERTICAL POSTS SHALL BE TREATED WOOD (4" X 4" MINIMUM) OR HEAVY-DUTY STRUCTURAL STEEL POSTS/TUBING. **UNISTRUT CHANNEL IS PROHIBITED FROM USE AS VERTICAL POSTS AND IS PERMITTED ONLY FOR HORIZONTAL CROSS-SUPPORTS.

B - WEATHERPROOF BOX, WITH MAIN DISCONNECT. FURNISHED AND INSTALLED BY THE CONSUMER. (AMP RATING SHALL BE CONSISTENT WITH SERVICE CONDUCTOR AMPACITY)

C - ELECTRIC METER, CONDUIT, WIRE, AND TRENCH INSTALLED BY HILCO ELECTRIC.

D - GROUNDING ELECTRODE CONDUCTOR ENTERS AND IS CONNECTED TO EQUIPMENT.

E - NIPPLE RACEWAY TO METER SOCKET SHALL BE RIGID METAL, I.M.C. OR SCH 80 ELECTRICAL PVC.

F - METER BASE FURNISHED, INSTALLED, AND WIRED BY CONSUMER. SHALL NOT BE USED AS RACEWAY

G – METAL 2-HOLE CONDUIT STRAP.

H- COPPER GROUNDING ELECTRODE CONDUCTOR SIZED AND INSTALLED BY CONSUMER ACCORDING TO HILCO REQUIREMENTS. (#6 SOFT DRAWN BARE OR STRANDED COPPER MINIMUM.)

I - APPROVED GROUNDING ELECTRODE AND CLAMP, FURNISHED AND INSTALLED BY CONSUMER. (GROUNDING ROD SHALL BE 5/8" X 8' COPPER OR GALVANIZED.)

J - SERVICE RACEWAY SHALL BE GALVANIZED RIGID STEEL CONDUIT, I.M.C. OR SCH 80 ELECTRICAL PVC. FURNISHED AND INSTALLED BY CONSUMER TO A